STEEL CRANE MATS BY RAPTOR TECH

Absolutely The Best Crane Mats In The World.

This document is stored and available in the Raptor Tech Technical Document Repository.

To help our customers understand certain critical data points that factor into purchasing crane mats, Raptor Tech maintains a repository of technical documents with data from all major crane manufacturers.

You can visit Raptor Tech's repository to get crane specifications and technical details for crane models in addition to this model at:

https://library.steelcranemats.com

Thank You for Visiting the SteelCraneMats.com Technical Specifications Document Repository.

TEREX®

HC 285
285tons capacity
Crawler crane
Datasheet
imperial

HC 285

WORKS FOR YOU.™

STEEL CRANE BRAKE & REPORTER

Professional Technical Documentation

The Superflash Technical Document Repository

Is the only official source of this document.

The Superflash Technical Document Repository

is the copyrighted work published by Superflash Technical Documentation Services LLC.

Unauthorized reproduction, distribution, or modification of this document is prohibited.

Contact info@superflash.com for inquiries.

If you have received this document from any other source, it may be outdated, incomplete, or modified without our knowledge. Please ask the sender for the current version.

CONTENTS

Page:

Highlights 4
Specifications 5
Dimensions 6-7

92HI Offset Tip Boom
Range Diagram 8
Load Charts 9
Load Charts (Crane on Barge – Offshore Floating) 17
Notes to Lifting Capacity 19

92HI Offset Tip Boom + 16HL Fixed Jib
Range Diagram 20
Load Charts 21
Notes to Lifting Capacity 67

Technical description 68

Transport Example for HC 285
. 69

KEY

	Counterweight
	Track
	Central ballast
	Main boom
	Fly jib
	Wind speed in m/s (meter per second)

HIGHLIGHTS

- 285 tons maximum lift capacity
- Power up/down standard
- Free fall on main and auxiliary drums optional
- Quiet, comfortable operator's cab with excellent viewing range
- Shockless stop system gradually retards operating speed to reduce shocks when crane approaches lifting load or boom limits
- Two speed travel allows operator to select the best speed and power control for any condition
- Superior transportability:
  10.5 ft width
  12 ft height
- Hydraulic counterweight removal system simplifies installation and removal

SPECIFICATIONS

Working speeds (infinitely variable)

Mechanism	Rope ø	Speeds [1]	Single line pull [2]	Length of hoist rope
Main hoist	28 mm	max. 524 ft/min	54,630 lbf	1000 ft / 1300 ft
Auxiliary hoist	28 mm	max. 524 ft/min	54,630 lbf	650 ft / 1000 ft / 1300 ft
Boom hoist	26 mm	max. 173 ft/min	38,581 lbf	1148 ft
Slewing (rpm)		1.5		

[1] top layer
[2] bottom layer

Carrier performance

Travel speed	0.67 mph

Hook block

Type	Possible load	Number of sheaves	Number of lines	Weight	Hook version
285	570,000 lb	8	16	8,000 lb	single
285	570,000 lb	8	16	10,500 lb	duplex
230	460,000 lb	6	12	6,000 lb	single
230	460,000 lb	6	12	6,930 lb	duplex
165	330,000 lb	5	10	3,650 lb	single
165	330,000 lb	5	10	3,800 lb	duplex
125	250,000 lb	4	8	2,700 lb	single
90	180,000 lb	3	6	2,850 lb	single
30	60,000 lb	1	2	750 lb	single
20	40,000 lb	Overhaul ball	1	1,350 lb	single

DIMENSIONS

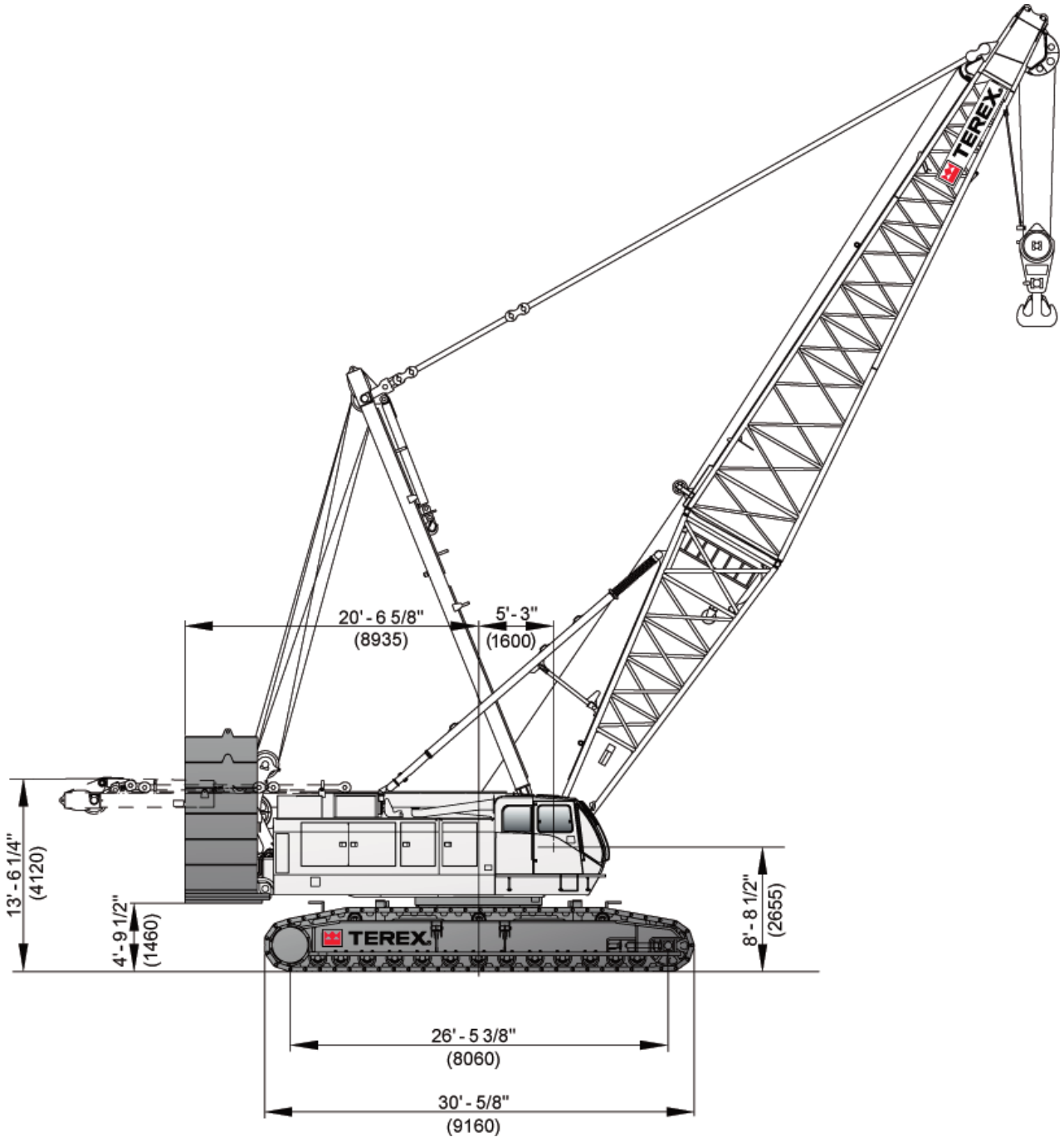
20' - 6 5/8"
(8935)
5' - 3"
(1600)
13' - 6 1/4"
(4120)
4' - 9 1/2"
(1460)
8' - 8 1/2"
(2655)
26' - 5 3/8"
(8060)
30' - 5/8"
(9160)
TEREX
TEREX

DIMENSIONS

HC 285

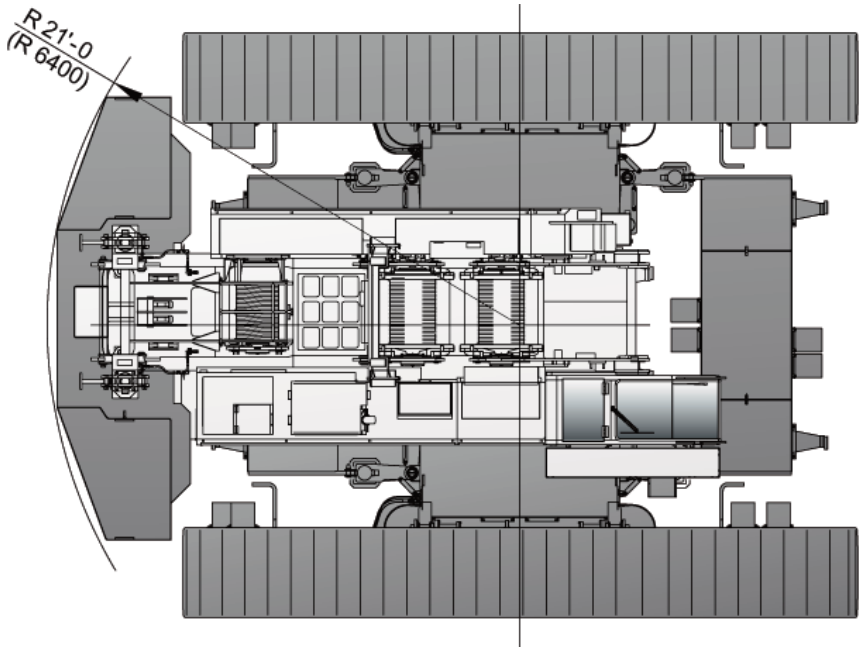

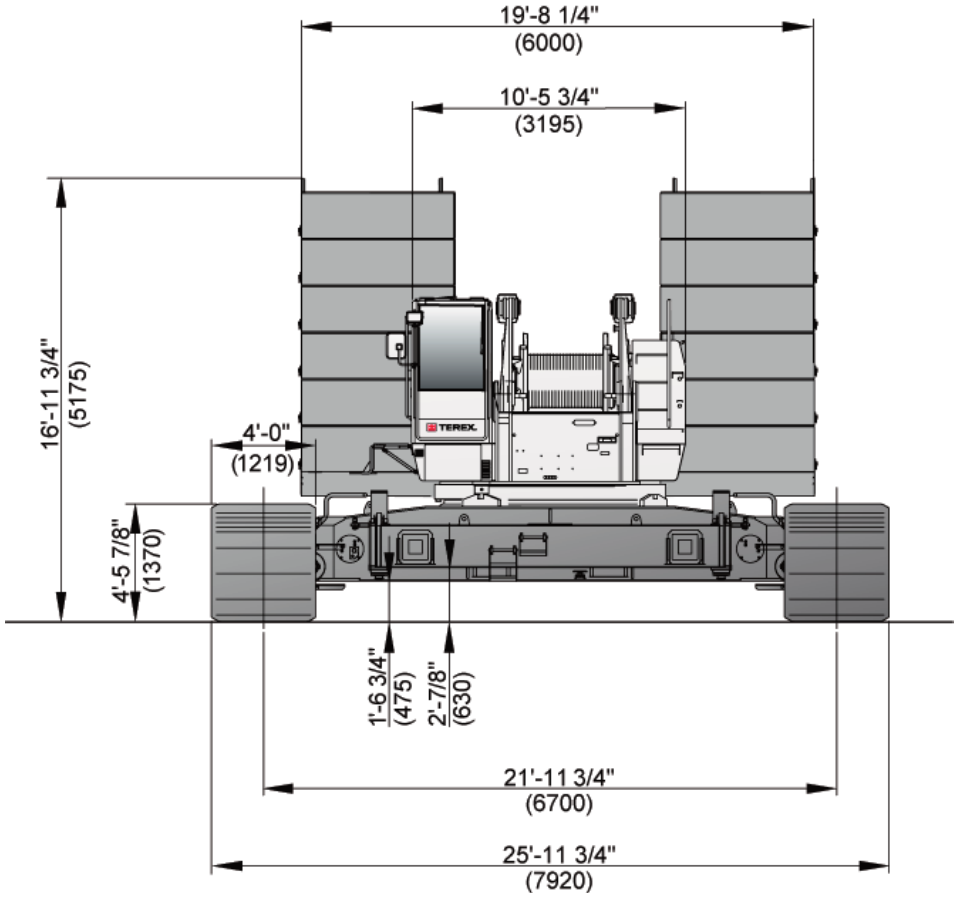

RANGE DIAGRAM

HC 285

92HI Offset Tip Boom

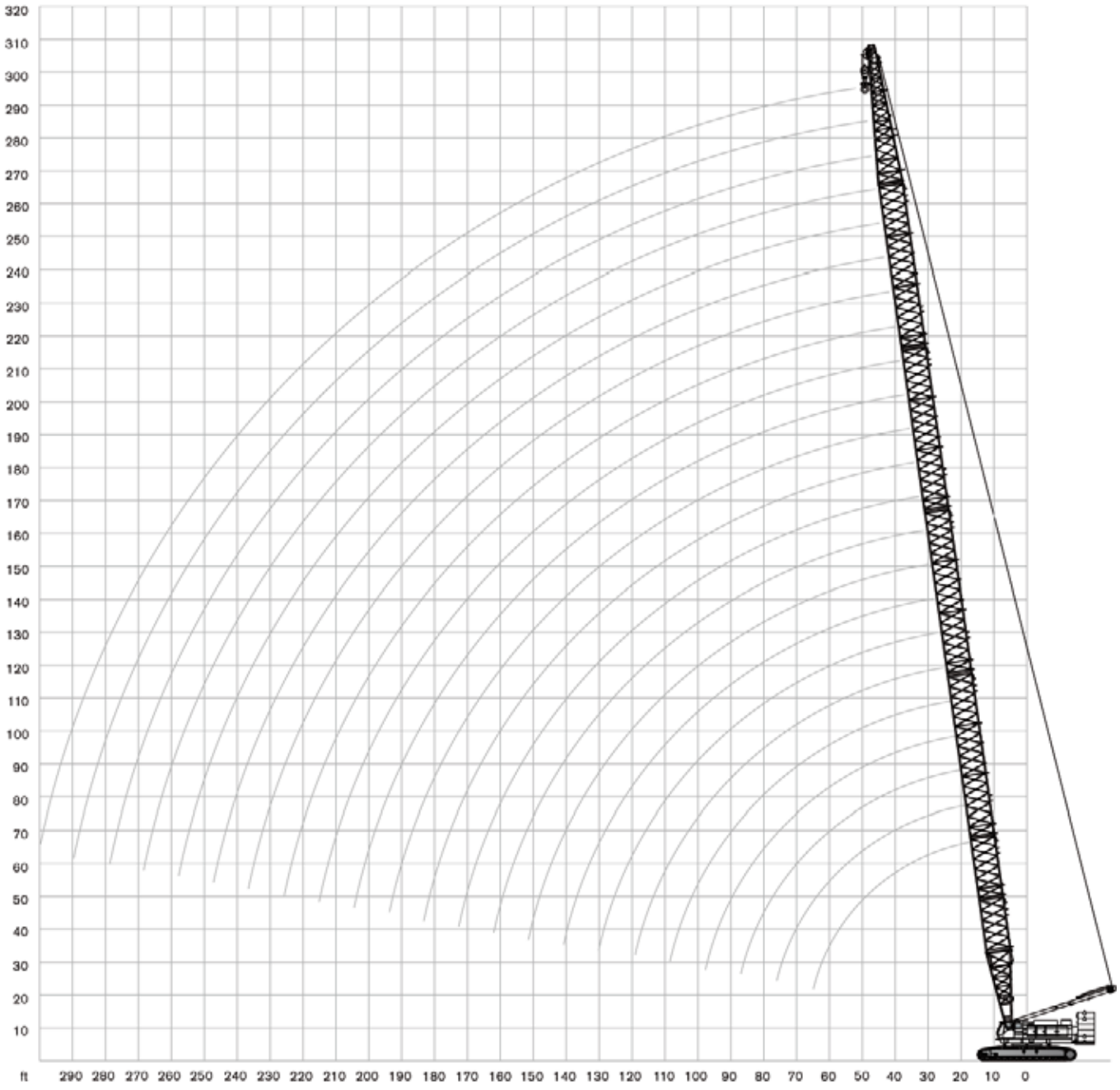

TEREX®

LOAD CHART

HC 285

With 92HI Offset Tip Boom

207,000 lb + 56,000 lb | 22 ft | 32.2 ft/s | 360° | ANSI B 30.5

ft	65.0 ft lb	80.0 ft lb	90.0 ft lb	100.0 ft lb	110.0 ft lb	120.0 ft lb	130.0 ft lb	140.0 ft lb	150.0 ft lb	160.0 ft lb	170.0 ft lb	180.0 ft lb	ft
16	570000*	-	-	-	-	-	-	-	-	-	-	-	16
18	518170*	517530*	-	-	-	-	-	-	-	-	-	-	18
20	466340*	465900*	465600*	-	-	-	-	-	-	-	-	-	20
21	447682*	447254*	446964*	443260*	-	-	-	-	-	-	-	-	21
22	429024*	428608*	428328*	425488*	422730*	-	-	-	-	-	-	-	22
24	391707*	391316*	391056*	389943*	397330*	387290*	-	-	-	-	-	-	24
25	373049*	372670*	372420*	372170*	371930*	371680*	348700*	-	-	-	-	-	25
27	348217*	347866*	347632*	347402*	347178*	346952*	333084*	319932*	-	-	-	-	27
28	335800*	335464*	335238*	335018*	334802*	334588*	325276*	314485*	306319*	-	-	-	28
29	323384*	323062*	322844*	322634*	322426*	322224*	317468*	311762*	302037*	282407*	-	-	29
30	310968*	310660*	310450*	310250*	310050*	309860*	309660*	309038*	297755*	278468*	-	-	30
31	302084*	301784*	301580*	301384*	301188*	301002*	300806*	300632*	290154*	273530*	267048*	-	31
32	293202*	292908*	292710*	292518*	292326*	292144*	291952*	292227*	282553*	268593*	262044*	226860*	32
34	275435*	275156*	274970*	274786*	274602*	274428*	274244*	275416*	267351*	258718*	257039*	223445*	34
35	266552*	266280*	266100*	265920*	265740*	265570*	265390*	267010*	259750*	253780*	247030*	220030*	35
36	258729	258310	258042	257804	257534	257300	257198	258402	252486	247612	241368*	217894*	36
38	243084	242370	241926	241572	241122	240760	240814	241186	237958	235276	230044*	213622*	38
39	235261	234400	233868	233456	232916	232490	232622	232578	230694	229108	224382*	211486*	39
40	227438	226430	225810	225340	224710	224220	224430	223970	223430	222940	218720*	209350*	40
41	220359	219354	218720	218242	217600	217100	217316	216840	216292	215788	212292	204834	41
42	213279	212278	211630	211144	210490	209980	210202	209710	209154	208636	205864	200318	42
43	206200	205201	204540	204046	203380	202860	203088	202580	202016	201484	199436	195802	43
45	192041	191049	190360	189850	189160	188620	188860	188320	187740	187180	186580	186770	45
46	186756	185835	185146	184632	183938	183396	183644	183100	182520	181952	181354	181468	46
47	181471	180621	179932	179414	178716	178172	178428	177880	177300	176724	176128	176166	47
49	170901	170192	169504	168978	168272	167724	167996	167440	166860	166268	165676	165562	49
50	165616	164978	164290	163760	163050	162500	162780	162220	161640	161040	160450	160260	50
55	143913	144751	144030	143480	142740	142160	142450	141850	141240	140610	139990	139830	55
60	121850*	128823	128128	127580	126830	126260	126580	125970	125380	124730	124120	124010	60
65	92980*	115661	115044	114470	113710	113120	113440	112800	112190	111530	110900	110240	65
70	-	104514	104326	103789	103040	102460	102810	102170	101580	100920	100310	100240	70
75	-	93628	95114	94626	93870	93270	93620	92970	92360	91690	91060	91010	75
80	-	78720*	87036	86803	86029	85420	85770	85100	84490	83800	83170	83130	80
85	-	-	79163	80013	79257	78640	79000	78320	77690	76990	76340	76310	85
90	-	-	68700*	73933	73359	72740	73090	72400	71760	71040	70380	70360	90
95	-	-	-	68083	68296	67728	68120	67430	66830	66120	65500	65510	95
100	-	-	-	60300*	63553	63102	63500	62800	62190	61480	60850	60860	100
105	-	-	-	-	58923	58958	59388	58680	58060	57340	56690	56720	105
110	-	-	-	-	53130*	55173	55683	54960	54340	53610	52960	52980	110
115	-	-	-	-	-	51460	52323	51619	50990	50250	49590	49620	115
120	-	-	-	-	-	46920*	49233	48575	47940	47190	46530	46570	120
125	-	-	-	-	-	-	46160	45800	45169	44420	43760	43790	125
130	-	-	-	-	-	-	42370*	43219	42645	41880	41210	41240	130
135	-	-	-	-	-	-	-	40675	40311	39539	38870	38910	135
140	-	-	-	-	-	-	-	37580*	38115	37386	36720	36760	140
145	-	-	-	-	-	-	-	-	35930	35395	34729	34770	145
150	-	-	-	-	-	-	-	-	33310*	33688	33106	33190	150
155	-	-	-	-	-	-	-	-	-	31783	31365	31469	155
160	-	-	-	-	-	-	-	-	-	29440*	29719	29866	160
165	-	-	-	-	-	-	-	-	-	-	28035	28353	165
170	-	-	-	-	-	-	-	-	-	-	25910*	26892	170
175	-	-	-	-	-	-	-	-	-	-	-	25378	175
180	-	-	-	-	-	-	-	-	-	-	-	23330*	180

Asterisk (*) areas on this chart indicate ratings that are limited by strength of material or factors other than stability (tipping)

LOAD CHART

HC 285

With 92HI Offset Tip Boom

207,000 lb + 56,000 lb | 22 ft | 32.2 ft/s | 360° | ANSI B 30.5

ft	190.0 ft lb	200.0 ft lb	210.0 ft lb	220.0 ft lb	230.0 ft lb	240.0 ft lb	250.0 ft lb	260.0 ft lb	270.0 ft lb	280.0 ft lb	290.0 ft lb	300.0 ft lb	ft
34	209580*	-	-	-	-	-	-	-	-	-	-	-	34
35	207020*	201290*	-	-	-	-	-	-	-	-	-	-	35
36	205316*	199258*	186570*	-	-	-	-	-	-	-	-	-	36
38	201908*	195194*	185075*	175780*	-	-	-	-	-	-	-	-	38
39	200204*	193162*	182085*	175080*	143390*	-	-	-	-	-	-	-	39
40	198500*	191130*	180590*	174380*	143090*	-	-	-	-	-	-	-	40
41	196068	189316*	178812*	172608*	142800*	130510*	-	-	-	-	-	-	41
42	193636	187502*	177034*	170836*	142510*	130220*	125280*	-	-	-	-	-	42
43	191204	185688*	175256*	169064*	142220*	129930*	124845*	117860*	-	-	-	-	43
45	186340	182060*	171700*	165520*	141640*	129350*	124410*	117290*	113580*	-	-	-	45
46	181028	177484	169094	164130	141350*	129072*	124134*	117024*	113306*	93940*	-	-	46
47	175716	172908	166488	162740	141060*	128794*	123858*	116758*	113032*	93688*	86920*	-	47
49	165092	163756	161276	159960	140480*	128238*	123306*	116226*	112484*	93435*	86580*	84590*	49
50	159780	159180	158670	158570	140190*	127960*	123030*	115960*	112210*	92930*	86240*	84340*	50
55	139300	138690	138610	138010	134600*	126560*	121630*	114650*	111070*	91760*	85030*	83120*	55
60	123470	122870	122290	121670	121320	120840	118010*	111470*	107700*	90550*	83870*	81930*	60
65	110230	109610	109020	108380	108060	108090	107490	106310*	102530*	89350*	82700*	80770*	65
70	99680	99080	98480	97860	97580	97060	96450	95900	95280	88230*	81610*	79670*	70
75	90420	89810	89200	88570	88300	87760	87140	86570	85940	84990*	80000*	79420*	75
80	82520	81900	81270	80630	80380	79810	79190	78600	77960	77580	77710	75590*	80
85	75690	75060	74410	73770	73530	72940	72310	71720	71070	71340	70810	70210	85
90	69730	69100	68440	68270	68070	67490	66890	66290	65670	65330	64790	64190	90
95	64890	64280	63630	63000	62800	62210	61600	61000	60370	60040	59490	58880	95
100	60230	59610	58950	58320	58130	57530	56920	56130	55680	55350	54780	54170	100
105	56070	55450	54790	54140	53960	53350	52740	52110	51480	51150	50580	49970	105
110	52330	51710	51040	50390	50210	49610	48980	48340	47710	47390	46810	46190	110
115	48960	48330	47650	47010	46830	46210	45580	44940	44300	43990	43400	42780	115
120	45900	45270	44580	43930	43760	43130	42510	41850	41210	40910	40310	39680	120
125	43120	42480	41780	41130	40960	40320	39690	39030	38390	38100	37490	36890	125
130	40560	39920	39210	38560	38400	37760	37120	36460	35810	35520	34910	34280	130
135	38220	37570	36860	36200	36050	35400	34760	34090	33440	33160	32540	32550	135
140	36060	35420	34700	34030	33880	33230	33090	32450	31820	31560	30970	30360	140
145	34070	33760	33070	32440	32320	31690	31080	30420	29790	29540	28940	28330	145
150	32520	31890	31200	30570	30450	29810	29190	28550	27910	27670	27060	26450	150
155	30790	30170	29460	28830	28720	28070	27450	26790	26160	25930	25310	24700	155
160	29170	28550	27840	27210	27100	26450	25830	25160	24530	24290	23680	23070	160
165	27669	27050	26340	25690	25590	24930	24310	23640	23010	22770	22150	21530	165
170	26256	25630	24920	24280	24170	23520	22890	22220	21580	21350	20730	20110	170
175	24923	24309	23590	22940	22840	22190	21550	20880	20240	20020	19390	18770	175
180	23633	23056	22350	21690	21600	20930	20310	19620	18980	18760	18130	17510	180
185	22273	21882	21169	20520	20420	19750	19130	18440	17800	17580	16940	16320	185
190	20380*	20719	20056	19410	19310	18640	18010	17330	16680	16460	15820	15200	190
195	-	19485	19002	18359	18260	17590	16950	16270	15620	15440	14770	14140	195
200	-	17650*	17958	17365	17270	16606	15960	15270	14630	14410	13760	13140	200
205	-	-	16813	16410	16339	15660	15020	14330	13680	13460	12810	12190	205
210	-	-	15080*	15471	15444	14770	14130	13430	12770	12570	11910	11292	210
215	-	-	-	14395	14588	13919	13280	12580	11930	11710	11050	10430	215
220	-	-	-	12660*	13730	13114	12480	11760	11110	10900	10250	9610	220
225	-	-	-	-	12700	12326	11708	10990	10340	10130	9470	8830	225
230	-	-	-	-	10910*	11525	10974	10260	9610	9390	8730	8100	230
235	-	-	-	-	-	10560	10265	9558	8900	8700	8030	7390	235
240	-	-	-	-	-	8780	9529	8893	8240	8030	7360	6720	240
245	-	-	-	-	-	-	8598	8234	7600	7390	6710	-	245
250	-	-	-	-	-	-	6790*	7554	6980	6780	6100	-	250
255	-	-	-	-	-	-	-	6658	6400	6200	-	-	255
260	-	-	-	-	-	-	-	4850*	5850	5650	-	-	260

Asterisk (*) areas on this chart indicate ratings that are limited by strength of material or factors other than stability (tipping)

LOAD CHART

HC 285

With 92HI Offset Tip Boom

180,000 lb + 56,000 lb | 22 ft | 32.2 ft/s | 360° | ANSI B 30.5

ft	65.0 ft lb	80.0 ft lb	90.0 ft lb	100.0 ft lb	110.0 ft lb	120.0 ft lb	130.0 ft lb	140.0 ft lb	150.0 ft lb	160.0 ft lb	170.0 ft lb	180.0 ft lb	ft
16	570000*	-	-	-	-	-	-	-	-	-	-	-	16
17	548640*	-	-	-	-	-	-	-	-	-	-	-	17
18	518050*	517530*	-	-	-	-	-	-	-	-	-	-	18
19	490680*	490160*	-	-	-	-	-	-	-	-	-	-	19
20	466340*	465900*	465600*	-	-	-	-	-	-	-	-	-	20
21	444210*	443800*	443530*	443260*	-	-	-	-	-	-	-	-	21
22	423960*	423550*	423270*	423000*	422730*	-	-	-	-	-	-	-	22
23	405600*	405230*	404980*	404730*	404490*	-	-	-	-	-	-	-	23
24	388650*	388270*	388030*	387780*	387530*	387290*	-	-	-	-	-	-	24
25	373050*	372670*	372420*	372170*	371930*	371680*	348700*	-	-	-	-	-	25
26	358800*	358460*	358240*	358010*	357790*	357570*	344070*	-	-	-	-	-	26
27	345470*	345130*	344900*	344680*	344450*	344230*	339960*	319820*	-	-	-	-	27
28	333100*	332750*	332530*	332300*	332080*	331860*	331630*	315900*	306650*	-	-	-	28
29	321720*	321410*	321210*	321010*	320810*	320610*	320420*	312720*	302840*	283100*	-	-	29
30	310970*	310660*	310450*	310250*	310050*	309860*	309660*	308590*	299080*	281240*	-	-	30
31	300900*	300590*	300390*	300190*	299990*	299790*	299590*	299400*	295730*	277890*	269970*	-	31
32	288680	291160	290960	290750	290550	290350	290160	289960	289760	274710*	267430*	226860*	32
33	275010	282480	282300	282120	281940	281770	281590	281420	281250	271530	264320*	224530*	33
34	262420	274140	273960	273780	273610	273430	273260	273090	272910	268730	261220	222240*	34
35	250890	249900	249340	248920	248330	247890	248050	247670	247160	246720	246200	220030*	35
36	240300	239290	238700	238260	237670	237200	237380	236960	236440	235990	235440	217840*	36
37	230530	222490	228890	228440	227820	227350	227530	227100	226550	226090	225540	215700*	37
38	221490	220440	219820	219360	218730	218230	218420	217960	217420	216920	216360	213600*	38
39	213240	212210	211600	211150	210530	210050	210270	209820	209290	208800	208250	207960	39
40	205440	204390	203780	203310	202680	202190	202400	201940	201400	200910	200350	200060	40
41	198160	197100	196470	196000	195350	194850	195070	194600	194050	193530	192960	192680	41
42	191370	190290	189650	189160	188500	187990	188220	187720	187170	186640	186060	185790	42
43	185000	183910	183250	182760	182080	181570	181800	181290	180730	180190	179600	179340	43
44	179030	177920	177250	176740	176070	175530	175770	175250	174680	174120	173530	173700	44
45	173410	172290	171600	171090	170400	169860	170100	169560	168980	168800	168220	168010	45
46	168230	167140	166480	165990	165300	164780	165050	164530	163970	163420	162840	162630	46
47	163230	162120	161460	160950	160270	159740	160010	159470	158910	158350	157770	157560	47
48	158510	157380	156700	156200	155500	154970	155230	154700	154130	153550	152970	152760	48
49	154030	152900	152210	151690	151000	150450	150720	150170	149590	149020	148420	148230	49
50	149790	148640	147950	147430	146710	146170	146440	145890	145300	144710	144110	143920	50
55	131600	130450	129740	129220	128510	127960	128260	127690	127120	126510	125910	125770	55
60	117100	115880	115150	114600	113850	113280	113600	112990	112400	111750	111140	111030	60
65	92980*	104170	103440	102890	102150	101590	101940	101330	100750	100110	99510	99430	65
70	-	94340	93580	93020	92270	91690	92040	91400	90810	90150	89540	89470	70
75	-	86080	85290	84710	83940	83350	83700	83040	82440	81760	81140	81090	75
80	-	78720*	78220	77620	76830	76220	76570	75900	75290	74600	73970	73930	80
85	-	-	72120	71500	70680	70060	70430	69740	69110	68740	68120	68120	85
90	-	-	66890	66290	65500	64900	65290	64620	64020	63330	62710	62710	90
95	-	-	-	61600	60780	60180	60570	59880	59280	58570	57940	57960	95
100	-	-	-	57440	56610	55980	56380	55680	55070	54360	53720	53730	100
105	-	-	-	-	52890	52250	52640	51930	51310	50590	49940	49970	105
110	-	-	-	-	49560	48900	49280	48560	47930	47210	46550	46580	110
115	-	-	-	-	-	45880	46250	45520	44890	44150	43500	43530	115
120	-	-	-	-	-	43150	43520	42770	42130	41380	40720	40750	120
125	-	-	-	-	-	-	41030	40260	39610	38860	38200	38230	125
130	-	-	-	-	-	-	38760	37970	37320	36550	35880	35920	130
135	-	-	-	-	-	-	-	35890	35220	34430	33760	33800	135
140	-	-	-	-	-	-	-	34060	33440	32690	32060	32130	140
145	-	-	-	-	-	-	-	-	31630	30880	30230	30310	145
150	-	-	-	-	-	-	-	-	29960	29190	28550	28630	150
155	-	-	-	-	-	-	-	-	-	27630	26980	27070	155
160	-	-	-	-	-	-	-	-	-	26180	25530	25620	160
165	-	-	-	-	-	-	-	-	-	-	24170	24250	165
170	-	-	-	-	-	-	-	-	-	-	22900	22980	170
175	-	-	-	-	-	-	-	-	-	-	-	21790	175
180	-	-	-	-	-	-	-	-	-	-	-	20680	180

Asterisk (*) areas on this chart indicate ratings that are limited by strength of material or factors other than stability (tipping)

LOAD CHART

HC 285

With 92HI Offset Tip Boom

180,000 lb + 56,000 lb | 22 ft | 32.2 ft/s | 360° | ANSI B 30.5

ft	190.0 ft lb	200.0 ft lb	210.0 ft lb	220.0 ft lb	230.0 ft lb	240.0 ft lb	250.0 ft lb	260.0 ft lb	270.0 ft lb	280.0 ft lb	290.0 ft lb	300.0 ft lb	ft
34	209580*	-	-	-	-	-	-	-	-	-	-	-	34
35	207020*	201290*	-	-	-	-	-	-	-	-	-	-	35
36	204930*	199300*	186570*	-	-	-	-	-	-	-	-	-	36
37	202880*	197390*	186190*	-	-	-	-	-	-	-	-	-	37
38	201330*	195490*	184450*	175780*	-	-	-	-	-	-	-	-	38
39	200300*	193060*	182310*	175440*	143390*	-	-	-	-	-	-	-	39
40	198500*	191130*	180590*	174380*	143090*	-	-	-	-	-	-	-	40
41	192740	189240	178890	172480*	142780*	130510*	-	-	-	-	-	-	41
42	185830	185290	177210	170810*	142470*	130220*	125280*	-	-	-	-	-	42
43	179370	178810	175050	169170*	142160*	129920*	124990*	117870*	-	-	-	-	43
44	173290	172730	172280	167590*	141930*	129620*	124700*	117590*	-	-	-	-	44
45	167580	167010	166550	165520*	141640*	129370*	124440*	117160*	113640*	-	-	-	45
46	162190	161620	161150	160550	141340*	129070*	124140*	117150*	113350*	93940*	-	-	46
47	157110	156530	156040	155450	141020*	128770*	123840*	116820*	113050*	93680*	86920*	-	47
48	152310	151720	151220	150620	140700*	128470*	123550*	116470*	112760*	93430*	86730*	-	48
49	147750	147170	146660	146570	140390*	128170*	123250*	116120*	112460*	93180*	86490*	84590*	49
50	143450	142840	142330	142230	140400*	127880*	122960*	115750*	112170*	92930*	86240*	84340*	50
55	125270	124680	124150	123540	123160	122710	121840*	114540*	110980*	91730*	85030*	83120*	55
60	110490	109890	109310	108690	108340	107860	107830	107330	106730	90490*	83840*	81910*	60
65	98890	98300	97730	97120	96810	96320	95720	95200	94580	89320*	82690*	80770*	65
70	88920	88310	87710	87100	86810	86290	85680	85130	84510	84090	81530*	79710*	70
75	80500	79890	79280	78650	78370	77830	77220	76650	76020	75620	75100	75190	75
80	73320	72700	72070	71430	71180	70610	69990	69400	68760	68380	68510	67910	80
85	67530	66920	66300	65690	65470	64920	64310	63730	63110	62760	62230	61640	85
90	62110	61490	60860	60240	60030	59460	58850	58260	57640	57300	56760	56160	90
95	57330	56730	56070	55450	55250	54660	54050	53450	52820	52490	51940	51330	95
100	53100	52490	51830	51190	51000	50410	49790	49180	48550	48230	47660	47040	100
105	49330	48700	48040	47400	47210	46610	45990	45370	44730	44410	43840	43220	105
110	45930	45310	44630	43980	43810	43200	42570	41940	41300	40990	40410	39790	110
115	42870	42240	41550	40910	40730	40120	39480	38850	38210	37900	37310	36690	115
120	40090	39460	38760	38110	37950	37320	36690	36040	35390	35090	34490	33870	120
125	37560	36920	36220	35570	35400	34760	34140	33470	32830	32540	32570	31960	125
130	35240	34590	33890	33230	33080	32930	32320	31690	31060	30800	30210	29610	130
135	33440	32830	32150	31520	31400	30780	30160	29520	28900	28650	28050	27440	135
140	31470	30860	30170	29540	29420	28800	28180	27530	26900	26650	26060	25450	140
145	29650	29030	28340	27710	27590	26960	26350	25700	25060	24820	24210	23610	145
150	27960	27340	26650	26010	25900	25250	24640	23990	23360	23110	22500	21890	150
155	26390	25770	25070	24430	24320	23670	23050	22390	21760	21530	20920	20300	155
160	24920	24300	23590	22960	22850	22200	21580	20910	20280	20040	19420	18820	160
165	23560	22930	22220	21580	21470	20820	20200	19530	18890	18660	18040	17420	165
170	22280	21640	20930	20300	20180	19540	18910	18240	17600	17370	16740	16120	170
175	21080	20440	19730	19080	18980	18320	17690	17020	16380	16160	15530	14910	175
180	19960	19320	18600	17940	17850	17180	16560	15880	15240	15010	14380	13760	180
185	18900	18260	17530	16880	16780	16110	15490	14800	14160	13940	13300	12680	185
190	17910	17260	16530	15870	15780	15110	14470	13790	13140	12920	12290	11660	190
195	-	16330	15580	14920	14820	14150	13510	12830	12180	11960	11320	10700	195
200	-	15440	14680	14020	13920	13250	12620	11920	11280	11060	10410	9790	200
205	-	-	13840	13170	13070	12400	11750	11070	10410	10190	9550	8930	205
210	-	-	13050	12360	12270	11590	10950	10250	9590	9390	8730	8110	210
215	-	-	-	11610	11510	10820	10180	9480	8820	8610	7950	7330	215
220	-	-	-	10890	10790	10090	9450	8730	8080	7870	7220	6580	220
225	-	-	-	-	10100	9390	8750	8030	7380	7180	6510	5880	225
230	-	-	-	-	9460	8730	8090	7370	6720	6500	5840	5210	230
235	-	-	-	-	-	8120	7460	6730	6070	5870	5200	-	235
240	-	-	-	-	-	7530	6860	6130	5470	5270	-	-	240
245	-	-	-	-	-	-	6300	5550	-	-	-	-	245
250	-	-	-	-	-	-	5760	5010	-	-	-	-	250

Asterisk (*) areas on this chart indicate ratings that are limited by strength of material or factors other than stability (tipping)

LOAD CHART

HC 285

With 92HI Offset Tip Boom

154,000 lb + 56,000 lb | 22 ft | 32.2 ft/s | 360° | ANSI B 30.5

ft	65.0 ft lb	80.0 ft lb	90.0 ft lb	100.0 ft lb	110.0 ft lb	120.0 ft lb	130.0 ft lb	140.0 ft lb	150.0 ft lb	160.0 ft lb	170.0 ft lb	180.0 ft lb	ft
16	570000*	-	-	-	-	-	-	-	-	-	-	-	16
17	548640*	-	-	-	-	-	-	-	-	-	-	-	17
18	515050*	517530*	-	-	-	-	-	-	-	-	-	-	18
19	490680*	490160*	-	-	-	-	-	-	-	-	-	-	19
20	466340*	465900*	465600*	-	-	-	-	-	-	-	-	-	20
21	444210*	443800*	443530*	443260*	-	-	-	-	-	-	-	-	21
22	423960*	423550*	423270*	423000*	422730*	-	-	-	-	-	-	-	22
23	405600*	405230*	404980*	404730*	404490*	-	-	-	-	-	-	-	23
24	388650*	388270*	388030*	387780*	387530*	387290*	-	-	-	-	-	-	24
25	373050*	372670*	372420*	372170*	371930*	371680*	348700*	-	-	-	-	-	25
26	358800*	358460*	358240*	358010*	357790*	357570*	344070*	-	-	-	-	-	26
27	344420	343630	343230	342960	342540	342230	339960*	319820*	-	-	-	-	27
28	323110	322270	321850	321530	321080	320740	320800	315900*	306650*	-	-	-	28
29	304360	303520	303080	302760	302300	301950	302060	301840	301400	283090*	-	-	29
30	287490	286610	286130	285790	285300	284930	285040	284780	284330	281180*	-	-	30
31	272330	271420	270920	270550	270030	269630	269750	269460	268980	269010	268550	-	31
32	258640	257700	257180	256770	256230	255810	255950	255610	255120	255120	254640	226860*	32
33	246360	245420	244900	244510	243960	243550	243710	243370	242890	242510	242020	224530*	33
34	235030	234060	233520	233110	232550	232110	232280	231920	231420	231010	230500	222240*	34
35	224650	223670	223100	222680	222090	221650	221810	221430	220920	220480	219960	220020	35
36	215120	214110	213520	213080	212490	212020	212200	211790	211260	210810	210270	210340	36
37	206330	205300	204700	204250	203630	203150	203330	202900	202360	201890	201340	201420	37
38	198340	197320	196740	196290	195690	195220	195430	195010	194480	194020	193480	193170	38
39	190790	189760	189150	188710	188080	187600	187820	187370	186840	186360	185810	185520	39
40	183780	182730	182110	181640	181010	180520	180740	180270	179730	179240	178680	178390	40
41	177230	176160	175530	175060	174410	173910	174140	173660	173110	172600	172030	171750	41
42	171110	170040	169390	168910	168250	168010	167960	167470	167260	166760	166210	165970	42
43	165520	164460	163830	163370	162720	162220	162490	162000	161460	160940	160380	160150	43
44	160140	159060	158430	157950	157290	156800	157050	156550	156010	155480	154920	154690	44
45	155080	154000	153340	152860	152200	151680	151940	151440	150880	150350	149770	149560	45
46	150320	149220	148560	148070	147390	146870	147140	146620	146050	145500	144920	144720	46
47	145820	144700	144040	143540	142860	142330	142590	142060	141500	140930	140350	140140	47
48	141570	140440	139760	139260	138560	138030	138290	137760	137190	136610	136030	135820	48
49	137540	136560	135910	135420	134750	134230	134520	134000	133450	132890	132330	132160	49
50	133830	132740	132070	131570	130890	130370	130670	130130	129580	129010	128440	128280	50
55	117380	116220	115520	115000	114280	113730	114030	113460	112890	112290	111680	111550	55
60	104330	103250	102550	102030	101320	100770	101110	100530	99960	99350	98770	98670	60
65	92980	92590	91860	91310	90580	90020	90370	89750	89180	88540	87930	87850	65
70	-	83750	82990	82430	81680	81100	81450	80810	80220	79560	78950	78880	70
75	-	76320	75530	74950	74180	73590	73940	73280	72680	72010	71380	71330	75
80	-	70000	69290	68730	67970	67400	67780	67140	66550	65890	65280	65270	80
85	-	-	63790	63210	62430	61850	62230	61570	60990	60300	59690	59680	85
90	-	-	58990	58390	57600	57010	57390	56720	56120	55430	54810	54810	90
95	-	-	-	54170	53360	52750	53140	52460	51850	51150	50520	50530	95
100	-	-	-	50440	49600	48970	49370	48670	48060	47350	46710	46720	100
105	-	-	-	-	46250	45610	46010	45300	44680	43950	43310	43340	105
110	-	-	-	-	43260	42600	42990	42260	41640	40910	40260	40280	110
115	-	-	-	-	-	39880	40260	39530	38900	38160	37500	37530	115
120	-	-	-	-	-	37430	37800	37050	36410	35660	35000	35040	120
125	-	-	-	-	-	-	35570	34800	34140	33640	33020	33080	125
130	-	-	-	-	-	-	33620	32880	32280	31550	30930	30990	130
135	-	-	-	-	-	-	-	30980	30370	29630	29000	29080	135
140	-	-	-	-	-	-	-	29230	28610	27860	27230	27300	140
145	-	-	-	-	-	-	-	-	26980	26230	25590	25660	145
150	-	-	-	-	-	-	-	-	25470	24710	24070	24150	150
155	-	-	-	-	-	-	-	-	-	23300	22660	22750	155
160	-	-	-	-	-	-	-	-	-	22000	21350	21440	160
165	-	-	-	-	-	-	-	-	-	-	20130	20210	165
170	-	-	-	-	-	-	-	-	-	-	18990	19060	170
175	-	-	-	-	-	-	-	-	-	-	-	17990	175
180	-	-	-	-	-	-	-	-	-	-	-	16990	180

Asterisk (*) areas on this chart indicate ratings that are limited by strength of material or factors other than stability (tipping)

LOAD CHART

HC 285

With 92HI Offset Tip Boom

154,000 lb + 56,000 lb | 22 ft | 32.2 ft/s | 360° | ANSI B 30.5

ft	190.0 ft lb	200.0 ft lb	210.0 ft lb	220.0 ft lb	230.0 ft lb	240.0 ft lb	250.0 ft lb	260.0 ft lb	270.0 ft lb	280.0 ft lb	290.0 ft lb	300.0 ft lb	ft
34	209580*	-	-	-	-	-	-	-	-	-	-	-	34
35	207020*	201290*	-	-	-	-	-	-	-	-	-	-	35
36	204930*	199300*	186570*	-	-	-	-	-	-	-	-	-	36
37	201100	197390*	186160*	-	-	-	-	-	-	-	-	-	37
38	193290	192760	184440*	175760*	-	-	-	-	-	-	-	-	38
39	185610	185090	182340*	175350*	143360*	-	-	-	-	-	-	-	39
40	178470	177940	177540	174340*	143040*	-	-	-	-	-	-	-	40
41	171810	171270	170870	170300	142710*	130480*	-	-	-	-	-	-	41
42	165580	165030	164620	164050	142420*	130210*	125280*	-	-	-	-	-	42
43	159760	159190	158760	158190	142170*	129890*	124980*	117720*	-	-	-	-	43
44	154280	153720	153260	152690	141840*	129580*	124670*	117670*	-	-	-	-	44
45	149130	148560	148100	147510	141500*	129280*	124360*	117300*	113610*	-	-	-	45
46	144270	143700	143230	142630	141500	128970	124050*	116930*	113300*	93940*	-	-	46
47	139700	139110	138630	138040	138120	128650	123740*	116820*	113000*	93690*	-	-	47
48	135370	134780	134280	133680	133780	128390	123480*	116340*	112740*	93500*	-	-	48
49	131710	131150	130660	130080	129660	128080	123170*	116270*	112430*	93240*	-	-	49
50	127820	127250	126760	126170	125760	125350	122870*	115930*	112380*	92970*	-	-	50
55	111050	110460	109920	109310	108940	108480	107900	108020	107440	91670*	-	-	55
60	98160	97580	97030	96440	96110	95650	95060	94570	93970	90450*	-	-	60
65	87310	86720	86150	85540	85240	84750	84150	83620	83010	82570	-	-	65
70	78330	77720	77120	76510	76220	75700	75090	74540	73920	73500	-	-	70
75	70740	70130	69520	68890	68610	68080	67460	66890	66260	66510	-	-	75
80	64690	64090	63490	62880	62650	62110	61520	60950	60340	59980	-	-	80
85	59100	58490	57870	57250	57030	56480	55870	55290	54680	54320	-	-	85
90	54210	53600	52970	52340	52130	51560	50950	50360	49740	49400	-	-	90
95	49910	49300	48650	48020	47820	47240	46630	46020	45400	45060	-	-	95
100	46090	45480	44820	44190	44000	43400	42790	42170	41540	41220	-	-	100
105	42690	42070	41410	40760	40580	39970	39360	38730	38100	37770	-	-	105
110	39630	39010	38330	37690	37510	36900	36270	35640	35010	34690	-	-	110
115	36870	36240	35560	34920	34740	34120	33490	32850	32210	32520	-	-	115
120	34370	33740	33050	32840	32710	32110	31500	30880	30260	29990	-	-	120
125	32440	31830	31170	30540	30400	29800	29200	28570	27940	27680	-	-	125
130	30340	29730	29060	28440	28300	27690	27080	26450	25820	25560	-	-	130
135	28410	27810	27130	26500	26370	25750	25140	24500	23880	23620	-	-	135
140	26640	26030	25340	24710	24590	23970	23350	22700	22070	21820	-	-	140
145	25000	24380	23690	23060	22940	22310	21700	21050	20410	20170	-	-	145
150	23480	22850	22160	21530	21410	20770	20160	19510	18880	18630	-	-	150
155	22070	21440	20740	20100	19990	19350	18730	18070	17430	17200	-	-	155
160	20740	20120	19410	18780	18670	18020	17400	16730	16100	15860	-	-	160
165	19510	18890	18180	17530	17430	16770	16150	15490	14850	14620	-	-	165
170	18360	17730	17020	16380	16270	15620	14990	14320	13680	13450	-	-	170
175	17280	16650	15930	15290	15180	14530	13900	13220	12580	12360	-	-	175
180	16270	15630	14910	14260	14160	13500	12880	12190	11550	11330	-	-	180
185	15320	14680	13950	13300	13200	12530	11910	11220	10580	10360	-	-	185
190	14430	13780	13050	12390	12300	11630	10990	10310	9660	9450	-	-	190
195	-	12940	12190	11540	11430	10760	10130	9450	8790	8580	-	-	195
200	-	12150	11390	10730	10630	9950	9320	8620	7980	7760	-	-	200
205	-	-	10630	9960	9860	9190	8540	7860	7200	6990	-	-	205
210	-	-	9920	9240	9140	8460	7820	7120	6460	6260	-	-	210
215	-	-	-	8560	8460	7770	7130	6420	5770	5560	-	-	215
220	-	-	-	7910	7810	7110	6470	5750	5100	4890	-	-	220
225	-	-	-	-	7190	6480	5840	5130	-	-	-	-	225
230	-	-	-	-	6620	5890	5240	-	-	-	-	-	230
235	-	-	-	-	-	5340	-	-	-	-	-	-	235
240	-	-	-	-	-	4810	-	-	-	-	-	-	240

Asterisk (*) areas on this chart indicate ratings that are limited by strength of material or factors other than stability (tipping)

LOAD CHART

HC 285

With 92HI Offset Tip Boom

127,000 lb + 56,000 lb | 22 ft | 32.2 ft/s | 360° | ANSI B 30.5

ft	65.0 ft lb	80.0 ft lb	90.0 ft lb	100.0 ft lb	110.0 ft lb	120.0 ft lb	130.0 ft lb	140.0 ft lb	150.0 ft lb	160.0 ft lb	170.0 ft lb	180.0 ft lb	ft
16	570000*	-	-	-	-	-	-	-	-	-	-	-	16
17	541380*	-	-	-	-	-	-	-	-	-	-	-	17
18	510520*	508390*	-	-	-	-	-	-	-	-	-	-	18
19	483210*	481170*	-	-	-	-	-	-	-	-	-	-	19
20	458360*	456330*	455100*	-	-	-	-	-	-	-	-	-	20
21	436030*	434040*	432850*	431750*	-	-	-	-	-	-	-	-	21
22	415590*	413620*	412410*	411320*	409000*	-	-	-	-	-	-	-	22
23	397080*	395150*	393980*	391870*	390600*	-	-	-	-	-	-	-	23
24	379980*	378050*	375910*	374770*	373480*	372330*	-	-	-	-	-	-	24
25	360190	359520	359230	359030	358010*	356870*	348830*	-	-	-	-	-	25
26	334920	334180	333840	333590	333230	332960	333010	-	-	-	-	-	26
27	312860	312070	311680	311400	310990	310680	310740	310920	-	-	-	-	27
28	293590	292790	292380	292090	291680	291360	291450	291280	290860	-	-	-	28
29	276380	275530	275090	274770	274320	273970	274080	273850	273410	273150	-	-	29
30	261000	260120	259640	259300	258810	258440	258550	258290	257840	257900	-	-	30
31	247190	246270	245780	245410	244890	244490	244610	244650	244190	243870	243410	-	31
32	231290	233950	233450	233080	232560	232160	232320	232020	231550	231190	230710	226860*	32
33	223530	222600	222070	221680	221140	220730	220880	220550	220070	219690	219190	219210	33
34	213210	212240	211700	211290	210730	210290	210460	210100	209600	209190	208680	208720	34
35	203760	202770	202200	201780	201190	200750	200920	200530	200020	199580	199060	199120	35
36	195200	194230	193680	193260	192690	192250	192450	192060	191560	191130	190630	190290	36
37	187190	186200	185630	185200	184610	184150	184360	183950	183440	183000	182470	182150	37
38	179790	178770	178190	177740	177140	176670	176880	176460	175930	175470	174930	174620	38
39	172920	171880	171270	170830	170200	169720	169940	169490	168960	168480	167930	167640	39
40	166650	165640	165050	164620	164010	163540	163780	163350	162830	162350	161830	161560	40
41	160680	159660	159060	158610	157990	157510	157760	157310	156790	156290	155750	155500	41
42	155110	154070	153460	152990	152370	151880	152130	151670	151130	150630	150080	149840	42
43	149890	148840	148210	147740	147100	146600	146860	146380	145830	145320	144760	144530	43
44	144990	143920	143290	142800	142150	141650	141910	141410	140870	140330	139770	139540	44
45	140390	139300	138650	138170	137500	136990	137250	136750	136190	135650	135080	134860	45
46	136040	135110	134480	134010	133370	132860	133160	132660	132130	131600	131050	130860	46
47	132060	131000	130360	129880	129220	128730	129020	128510	127970	127430	126870	126690	47
48	128180	127110	126460	125980	125320	124800	125100	124590	124040	123490	122920	122750	48
49	124520	123430	122770	122290	121610	121100	121390	120870	120320	119760	119190	119020	49
50	121040	119940	119270	118780	118090	117580	117880	117340	116780	116220	115640	115480	50
55	106050	104890	104190	103670	102950	102400	102700	102130	101560	100950	100740	100630	55
60	94240	93080	92390	91860	91150	90600	90950	90360	89790	89180	88600	88500	60
65	84580	83370	82640	82090	81360	80800	81150	80530	79950	79320	78710	78630	65
70	-	75320	74560	74000	73240	72660	73020	72380	71780	71130	70510	70450	70
75	-	68640	67900	67350	66610	66050	66430	65800	65230	64570	63980	63960	75
80	-	62860	62080	61520	60760	60190	60580	59930	59340	58680	58070	58060	80
85	-	-	57070	56490	55710	55130	55510	54860	54270	53590	52970	52970	85
90	-	-	52700	52100	51310	50710	51100	50430	49830	49140	48520	48520	90
95	-	-	-	48250	47440	46840	47230	46540	45930	45230	44600	44620	95
100	-	-	-	44850	44020	43390	43790	43090	42480	41770	41130	41140	100
105	-	-	-	-	40970	40330	40720	40010	39390	38670	38020	38050	105
110	-	-	-	-	38240	37580	37970	37250	36620	35890	35240	35260	110
115	-	-	-	-	-	35110	35480	34750	34120	33380	33040	33100	115
120	-	-	-	-	-	32950	33390	32680	32080	31370	30750	30810	120
125	-	-	-	-	-	-	31330	30610	30010	29290	28670	28730	125
130	-	-	-	-	-	-	29450	28710	28110	27380	26750	26820	130
135	-	-	-	-	-	-	-	26980	26370	25630	25000	25080	135
140	-	-	-	-	-	-	-	25390	24760	24010	23380	23460	140
145	-	-	-	-	-	-	-	-	23280	22520	21880	21960	145
150	-	-	-	-	-	-	-	-	21910	21140	20500	20580	150
155	-	-	-	-	-	-	-	-	-	19860	19210	19300	155
160	-	-	-	-	-	-	-	-	-	18670	18020	18110	160
165	-	-	-	-	-	-	-	-	-	-	16900	16990	165
170	-	-	-	-	-	-	-	-	-	-	15870	15940	170
175	-	-	-	-	-	-	-	-	-	-	-	14970	175
180	-	-	-	-	-	-	-	-	-	-	-	14060	180

Asterisk (*) areas on this chart indicate ratings that are limited by strength of material or factors other than stability (tipping)

LOAD CHART

HC 285

With 92HI Offset Tip Boom

127,000 lb + 56,000 lb | 22 ft | 32.2 ft/s | 360° | ANSI B 30.5

ft	190.0 ft lb	200.0 ft lb	210.0 ft lb	220.0 ft lb	230.0 ft lb	240.0 ft lb	250.0 ft lb	260.0 ft lb	270.0 ft lb	280.0 ft lb	290.0 ft lb	300.0 ft lb	ft
34	208490	-	-	-	-	-	-	-	-	-	-	-	34
35	198850	198820	-	-	-	-	-	-	-	-	-	-	35
36	190000	189950	186440*	-	-	-	-	-	-	-	-	-	36
37	181830	181780	181450	-	-	-	-	-	-	-	-	-	37
38	174740	174210	173870	173340	-	-	-	-	-	-	-	-	38
39	167730	167210	166830	166290	143280*	-	-	-	-	-	-	-	39
40	161210	160680	160280	159740	142990*	-	-	-	-	-	-	-	40
41	155130	154590	154190	153630	142730*	130440*	-	-	-	-	-	-	41
42	149450	148900	148480	147920	142380*	130120*	125210*	-	-	-	-	-	42
43	144130	143570	143140	142570	142040*	129800*	124900*	117820*	-	-	-	-	43
44	139140	138570	138120	137540	137600	129470*	124580*	117720*	-	-	-	-	44
45	134430	133870	133410	132820	132880	129160*	124260*	117200*	-	-	-	-	45
46	130450	129900	129450	128880	128450	128090	123980*	117000*	-	-	-	-	46
47	126270	125710	125260	124690	124250	123880	123310	116750*	-	-	-	-	47
48	122320	121760	121290	120710	120280	119900	119330	116400*	-	-	-	-	48
49	118580	118010	117530	116940	116530	116130	115560	115740	-	-	-	-	49
50	115030	114450	113960	113370	112960	112560	111990	112160	-	-	-	-	50
55	100150	99590	99080	98500	98150	97720	97160	96690	-	-	-	-	55
60	87990	87410	86870	86270	85940	85480	84890	84400	-	-	-	-	60
65	78090	77500	76930	76320	76020	75520	74920	74400	-	-	-	-	65
70	69890	69280	68680	68070	67780	67260	66650	66110	-	-	-	-	70
75	63400	62800	62220	61610	61370	60850	60260	59720	-	-	-	-	75
80	57490	56880	56280	55670	55440	54900	54310	53750	-	-	-	-	80
85	52380	51770	51150	50530	50320	49760	49150	48580	-	-	-	-	85
90	47920	47300	46670	46050	45840	45270	44660	44070	-	-	-	-	90
95	43990	43380	42730	42110	41910	41320	40710	40110	-	-	-	-	95
100	40510	39900	39240	38600	38410	37820	37200	36590	-	-	-	-	100
105	37410	36780	36120	35480	35300	34690	34070	33450	-	-	-	-	105
110	34610	33990	33320	32670	32490	32410	31810	31200	-	-	-	-	110
115	32470	31870	31210	30600	30450	29860	29260	28650	-	-	-	-	115
120	30180	29570	28910	28290	28150	27550	26950	26320	-	-	-	-	120
125	28090	27480	26810	26190	26050	25440	24840	24210	-	-	-	-	125
130	26170	25560	24890	24260	24130	23520	22910	22280	-	-	-	-	130
135	24410	23800	23130	22500	22370	21750	21140	20490	-	-	-	-	135
140	22790	22180	21500	20870	20740	20120	19510	18860	-	-	-	-	140
145	21300	20680	19990	19360	19240	18610	18000	17340	-	-	-	-	145
150	19910	19280	18590	17960	17840	17200	16590	15940	-	-	-	-	150
155	18620	18000	17290	16660	16550	15900	15280	14620	-	-	-	-	155
160	17410	16790	16080	15450	15340	14690	14070	13400	-	-	-	-	160
165	16290	15670	14960	14310	14210	13550	12930	12270	-	-	-	-	165
170	15240	14610	13900	13260	13150	12500	11870	11200	-	-	-	-	170
175	14260	13620	12910	12260	12150	11500	10870	10200	-	-	-	-	175
180	13340	12700	11980	11320	11230	10560	9940	9260	-	-	-	-	180
185	12470	11830	11100	10450	10350	9680	9060	8370	-	-	-	-	185
190	11660	11010	10280	9620	9530	8860	8220	7540	-	-	-	-	190
195	-	10250	9500	8840	8740	8070	7430	6750	-	-	-	-	195
200	-	9520	8770	8100	8010	7330	6700	6000	-	-	-	-	200
205	-	-	8070	7400	7310	6630	5990	5300	-	-	-	-	205
210	-	-	7430	6740	6650	5970	5330	-	-	-	-	-	210
215	-	-	-	6130	6030	5340	4700	-	-	-	-	-	215
220	-	-	-	5540	5440	4740	-	-	-	-	-	-	220
225	-	-	-	-	4880	-	-	-	-	-	-	-	225

Asterisk (*) areas on this chart indicate ratings that are limited by strength of material or factors other than stability (tipping)

LOAD CHART

HC 285

With 92HI Offset Tip Boom
Crane on Barge – Offshore Floating

207,000 lb + 56,000 lb | 22 ft | 32.2 ft/s | 360° | ANSI B 30.5

3 Degrees Maximum Combined List and Roll

ft	65.0 ft lb	80.0 ft lb	90.0 ft lb	100.0 ft lb	110.0 ft lb	120.0 ft lb	130.0 ft lb	140.0 ft lb	150.0 ft lb	160.0 ft lb	170.0 ft lb	180.0 ft lb	ft
16	524480*	-	-	-	-	-	-	-	-	-	-	-	16
17	492880*	-	-	-	-	-	-	-	-	-	-	-	17
18	464960*	462760*	-	-	-	-	-	-	-	-	-	-	18
19	439850*	437700*	-	-	-	-	-	-	-	-	-	-	19
20	417110*	414980*	413700*	-	-	-	-	-	-	-	-	-	20
21	396700*	394610*	393350*	392200*	-	-	-	-	-	-	-	-	21
22	378010*	375920*	374670*	373510*	372230*	-	-	-	-	-	-	-	22
23	361090*	359040*	357810*	356700*	355440*	-	-	-	-	-	-	-	23
24	345450*	343410*	342180*	341060*	339810*	338680*	-	-	-	-	-	-	24
25	331050*	329020*	327790*	326680*	325430*	324590*	302690*	-	-	-	-	-	25
26	317920*	315930*	314720*	313650*	312420*	310500*	298990*	-	-	-	-	-	26
27	305610*	303640*	302430*	301350*	299350*	298210*	295590*	276450*	-	-	-	-	27
28	294200*	292220*	291010*	289940*	287940*	286800*	287150*	273210*	265630*	-	-	-	28
29	283710*	281780*	280600*	278830*	277570*	276460*	276830*	270580*	262760*	242280*	-	-	29
30	273790*	271870*	269990*	268920*	267650*	266550*	266920*	265820*	260100*	241970*	-	-	30
31	264510*	262590*	260720*	259640*	258370*	257270*	257650*	256580*	255760*	240250*	221780*	-	31
32	255810*	253250*	252010*	250940*	249680*	248570*	248960*	247880*	246670*	237980*	221630*	174530*	32
33	247640*	245090*	243850*	243000*	241760*	240690*	241100*	240030*	240030*	235390*	221480*	174380*	33
34	240090*	237570*	236350*	235310*	234070*	233000*	233410*	232340*	231220*	230240*	221780*	174230*	34
35	232840*	230320*	229100*	228070*	226830*	225760*	226170*	225100*	223970*	223170*	221780*	174080*	35
36	225420*	223470*	222260*	221220*	219980*	218910*	219330*	219330*	217130*	215940*	214860*	173940*	36
37	218950*	217000*	215780*	214750*	213500*	212430*	212850*	211780*	210650*	209500*	208570*	173810*	37
38	212810*	210860*	209650*	208610*	207370*	206310*	206730*	205650*	205650*	203400*	202640*	173680*	38
39	207000*	205050*	203820*	203020*	201800*	200760*	201210*	200160*	199060*	197980*	196770*	173550*	39
40	201600*	199690*	198500*	197490*	196270*	195230*	195680*	194630*	193530*	192450*	191290*	173440*	40
41	196330*	194430*	193230*	192230*	191010*	189970*	190430*	189370*	188290*	187190*	186060*	173330*	41
42	191330*	189420*	188230*	187220*	186010*	184970*	185420*	184370*	183280*	182190*	181090*	173210*	42
43	186550*	184650*	183450*	182450*	181230*	180200*	180660*	179590*	178510*	177420*	176320*	173210*	43
44	182000*	180090*	178900*	177890*	176670*	175650*	176100*	175030*	173960*	172860*	171780*	171880*	44
45	177650*	175740*	174540*	173540*	172320*	171290*	171750*	170690*	169610*	168520*	167420*	167340*	45
46	173490*	171580*	170380*	169380*	168160*	167130*	167590*	166520*	165450*	164350*	163260*	163320*	46
47	169500*	167590*	166390*	165390*	164170*	163150*	163600*	162530*	161810*	160740*	159680*	159490*	47
48	165680*	163770*	162570*	161790*	160600*	159590*	160080*	159040*	158000*	156920*	155860*	155700*	48
49	162130*	160270*	159100*	158130*	156930*	155940*	156420*	155370*	154340*	153260*	152210*	152080*	49
50	158620*	156760*	155570*	154610*	153410*	152420*	152910*	151850*	150820*	149740*	148700*	148590*	50
55	142970*	141090*	139910*	138950*	137750*	136750*	137240*	136190*	135160*	134080*	133020*	133040*	55
60	121850*	128020*	126830*	125870*	124650*	123660*	124160*	123100*	122080*	121340*	120330*	120370*	60
65	92980*	115661	115044	114470	113810*	112850*	113380*	112320*	111340*	110270*	109250*	109300*	65
70	-	104514	104326	103789	103040	102460	102810	102170	101580	100770*	99760*	99820*	70
75	-	93628	95114	94626	93870	93270	93620	92970	92360	91690	91060	91010	75
80	-	78720*	87036	86803	86029	85420	85770	85100	84490	83800	83170	83130	80
85	-	-	79163	80013	79257	78640	79000	78320	78000	77320	76700	76700	85
90	-	-	68700*	73933	73359	72740	73320	72660	72050	71360	70740	70740	90
95	-	-	-	68083	68296	67728	68120	67430	66830	66120	65500	65510	95
100	-	-	-	60300*	68553	63102	63500	62800	62190	61480	60850	60860	100
105	-	-	-	-	58923	58958	59388	58680	58060	57340	56690	56720	105
110	-	-	-	-	53130*	55173	55683	54960	54340	53610	52960	52980	110
115	-	-	-	-	-	51460	52323	51620	50990	50250	49590	49620	115
120	-	-	-	-	-	46920*	49233	48575	47940	47190	46530	46570	120
125	-	-	-	-	-	-	46160	45800	45170	44420	43760	43790	125
130	-	-	-	-	-	-	42370*	43215	42645	41880	41210	41240	130
135	-	-	-	-	-	-	-	40675	40311	39540	38870	38910	135
140	-	-	-	-	-	-	-	37580*	38115	37386	36720	36760	140
145	-	-	-	-	-	-	-	-	35930	35395	34729	34770	145
150	-	-	-	-	-	-	-	-	33310*	33688	33106	33190	150
155	-	-	-	-	-	-	-	-	-	31783	31365	31469	155
160	-	-	-	-	-	-	-	-	-	29440*	29719	29866	160
165	-	-	-	-	-	-	-	-	-	-	28035	28353	165
170	-	-	-	-	-	-	-	-	-	-	25910*	26892	170
175	-	-	-	-	-	-	-	-	-	-	-	25378	175
180	-	-	-	-	-	-	-	-	-	-	-	23330*	180

Asterisk (*) areas on this chart indicate ratings that are limited by strength of material or factors other than stability (tipping)

LOAD CHART

HC 285

With 92HI Offset Tip Boom
Crane on Barge – Offshore Floating

207,000 lb + 56,000 lb | 22 ft | 32.2 ft/s | 360° | ANSI B 30.5

3 Degrees Maximum Combined List and Roll

ft	190.0 ft lb	200.0 ft lb	210.0 ft lb	220.0 ft lb	230.0 ft lb	240.0 ft lb	250.0 ft lb	260.0 ft lb	270.0 ft lb	280.0 ft lb	290.0 ft lb	300.0 ft lb	0ft
34	157170*	-	-	-	-	-	-	-	-	-	-	-	34
35	157010*	149110*	-	-	-	-	-	-	-	-	-	-	35
36	156860*	148950*	133990*	-	-	-	-	-	-	-	-	-	36
37	156710*	148800*	133830*	-	-	-	-	-	-	-	-	-	37
38	156570*	148640*	133670*	126450*	-	-	-	-	-	-	-	-	38
39	156430*	148490*	133510*	126290*	-	-	-	-	-	-	-	-	39
40	157010*	148340*	133360*	126130*	-	-	-	-	-	-	-	-	40
41	156840*	148190*	133210*	126000*	-	-	-	-	-	-	-	-	41
42	156640*	148050*	133070*	125840*	-	-	-	-	-	-	-	-	42
43	155930*	147930*	132920*	125690*	-	-	-	-	-	-	-	-	43
44	155930*	147790*	132780*	125540*	-	-	-	-	-	-	-	-	44
45	155930*	147660*	132650*	125390*	-	-	-	-	-	-	-	-	45
46	155930*	147530*	132510*	125250*	-	-	-	-	-	-	-	-	46
47	155930*	147400*	132380*	125110*	-	-	-	-	-	-	-	-	47
48	154840*	147290*	132250*	124970*	-	-	-	-	-	-	-	-	48
49	151110*	147290*	132120*	124830*	-	-	-	-	-	-	-	-	49
50	147730*	146600*	131990*	124690*	-	-	-	-	-	-	-	-	50
55	131960*	130820*	129730*	124040*	-	-	-	-	-	-	-	-	55
60	119410*	118410*	117230*	116100*	-	-	-	-	-	-	-	-	60
65	108330*	107340*	106070*	105250*	-	-	-	-	-	-	-	-	65
70	98850*	97860*	96590*	95570*	-	-	-	-	-	-	-	-	70
75	90420	89420*	88390*	87360*	-	-	-	-	-	-	-	-	75
80	82520	81900	81210*	80690*	-	-	-	-	-	-	-	-	80
85	76110	75500	74880	74260	-	-	-	-	-	-	-	-	85
90	70140	69530	68900	68270	-	-	-	-	-	-	-	-	90
95	64890	64280	63630	63000	-	-	-	-	-	-	-	-	95
100	60230	59610	58950	58320	-	-	-	-	-	-	-	-	100
105	56070	55450	54790	54140	-	-	-	-	-	-	-	-	105
110	52330	51710	51040	50390	-	-	-	-	-	-	-	-	110
115	48960	48330	47650	47010	-	-	-	-	-	-	-	-	115
120	45900	45270	44580	43930	-	-	-	-	-	-	-	-	120
125	43120	42480	41780	41130	-	-	-	-	-	-	-	-	125
130	40560	39920	39210	39000	-	-	-	-	-	-	-	-	130
135	38220	37940	37260	36630	-	-	-	-	-	-	-	-	135
140	36060	35770	35090	34450	-	-	-	-	-	-	-	-	140
145	34070	33760	33070	32440	-	-	-	-	-	-	-	-	145
150	32520	31890	31200	30570	-	-	-	-	-	-	-	-	150
155	30790	30170	29460	28830	-	-	-	-	-	-	-	-	155
160	29170	28550	27840	27210	-	-	-	-	-	-	-	-	160
165	27669	27050	26340	25680*	-	-	-	-	-	-	-	-	165
170	26256	25630	24920	24050*	-	-	-	-	-	-	-	-	170
175	24923	24309	23590	22610*	-	-	-	-	-	-	-	-	175
180	23633	23056	22200*	21250*	-	-	-	-	-	-	-	-	180
185	22273	21882	20920*	19980*	-	-	-	-	-	-	-	-	185
190	20380*	20719*	19710*	18770*	-	-	-	-	-	-	-	-	190
195	-	19485*	18560*	17630*	-	-	-	-	-	-	-	-	195
200	-	17650*	17480*	16550*	-	-	-	-	-	-	-	-	200
205	-	-	16460*	15530*	-	-	-	-	-	-	-	-	205
210	-	-	15080*	14480*	-	-	-	-	-	-	-	-	210
215	-	-	-	13560*	-	-	-	-	-	-	-	-	215
220	-	-	-	12660*	-	-	-	-	-	-	-	-	220

Asterisk (*) areas on this chart indicate ratings that are limited by strength of material or factors other than stability (tipping)

NOTES TO LIFTING CAPACITY

Main Boom Chart Information

92HI Offset Tip Boom

Boom length (ft)	25' 92HI Inner	15' 92HT Center	20' 92HT Center	10' 92ST Center	50' 92ST Center	40' 92H Outer
65	1	0	0	0	0	1
80	1	1	0	0	0	1
90	1	1	0	1	0	1
100	1	1	1	0	0	1
110	1	1	1	1	0	1
120	1	1	1	2	0	1
130	1	1	0	0	1	1
140	1	1	0	1	1	1
150	1	1	1	0	1	1
160	1	1	1	1	1	1
170	1	1	1	2	1	1
180	1	1	0	0	2	1
190	1	1	0	1	2	1
200	1	1	1	0	2	1
210	1	1	1	1	2	1
220	1	1	1	2	2	1
230	1	1	0	0	3	1
240	1	1	0	1	3	1
250	1	1	1	0	3	1
260	1	1	1	1	3	1
270	1	1	1	2	3	1
280	1	1	0	0	4	1
290	1	1	0	1	4	1
300	1	1	1	0	4	1

RANGE DIAGRAM

HC 285

92HI Offset Tip Boom + 16HL Fixed Jib

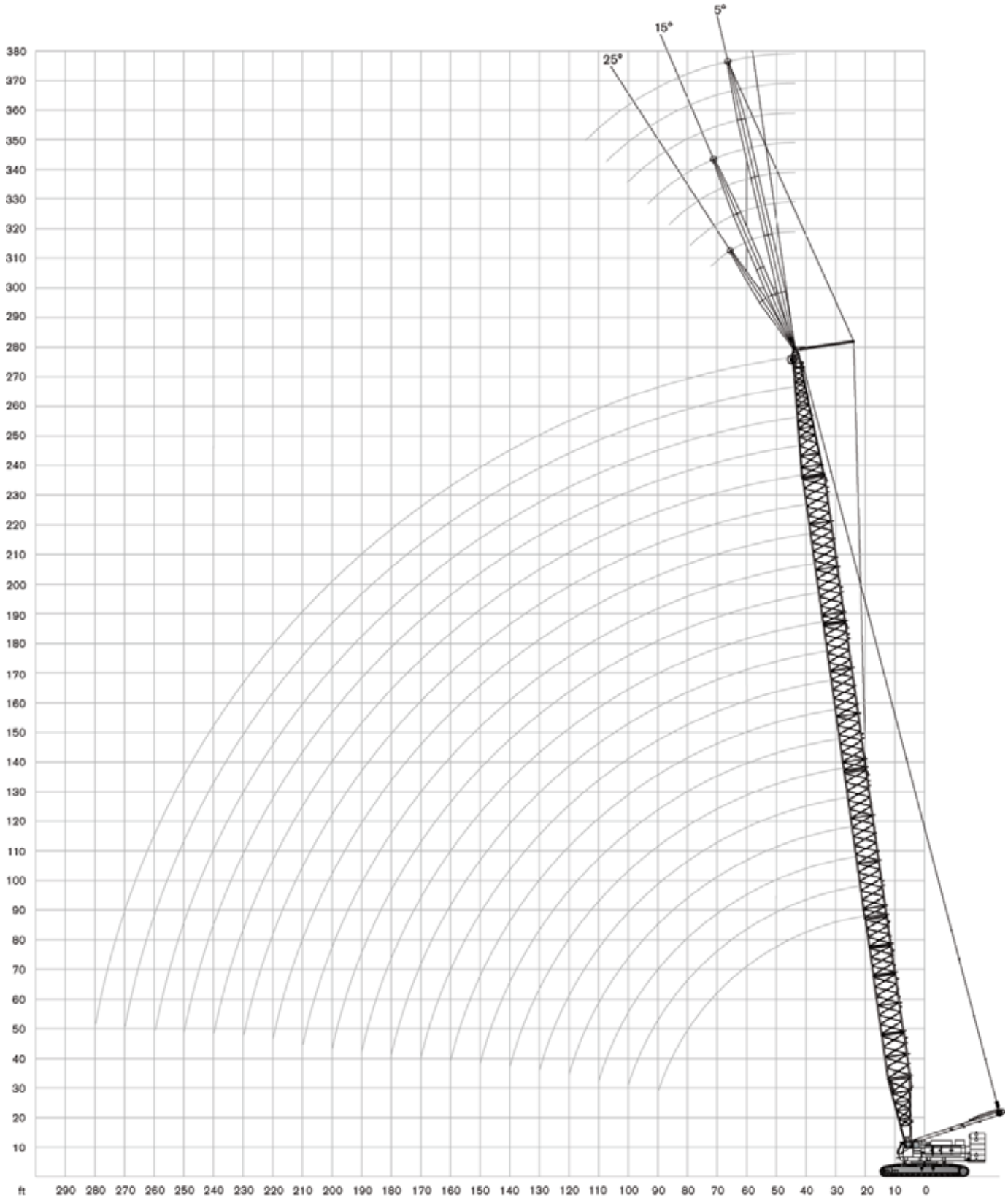

TEREX®

LOAD CHART

HC 285

With 92HI Offset Tip Boom + 16HL Fixed Jib

207,000 lb + 56,000 lb CB | **360°** | **ANSI B 30.5**

40' Jib length

	100 ft			110 ft			120 ft			130 ft			
	5°	15°	25°	5°	15°	25°	5°	15°	25°	5°	15°	25°	
ft	lb	lb	lb	lb	lb	lb	lb	lb	lb	lb	lb	lb	ft
29	32000*	-	-	-	-	-	-	-	-	-	-	-	29
30	32000*	-	-	32000*	-	-	-	-	-	-	-	-	30
31	32000*	-	-	32000*	-	-	-	-	-	-	-	-	31
32	32000*	-	-	32000*	-	-	32000*	-	-	-	-	-	32
33	32000*	-	-	32000*	-	-	32000*	-	-	32000*	-	-	33
35	32000*	-	-	32000*	-	-	32000*	-	-	32000*	-	-	35
40	32000*	32000*	-	32000*	32000*	-	32000*	32000*	-	32000*	32000*	-	40
50	32000*	32000*	30760*	32000*	32000*	31420*	32000*	32000*	32000*	32000*	32000*	32000*	50
60	32000*	32000*	27580*	32000*	32000*	28230*	32000*	32000*	28880*	32000*	32000*	29500*	60
70	32000*	32000*	24990*	32000*	32000*	25740*	32000*	32000*	26360*	32000*	32000*	27050*	70
80	32000*	29550*	22930*	32000*	30880*	23680*	32000*	32000*	24330*	32000*	32000*	24930*	80
90	31840*	26770*	21280*	32000*	28090*	21920*	32000*	29320*	22610*	32000*	30530*	23230*	90
100	28730*	24590*	19930*	30530*	25710*	20530*	32000*	26880*	21220*	32000*	27980*	21790*	100
110	-	-	-	27830*	23820*	19440*	29470*	24860*	19980*	30980*	25970*	20540*	110
120	-	-	-	-	-	-	27130*	23290*	19000*	28510*	24160*	19530*	120
130	-	-	-	-	-	-	-	-	-	26470*	22730*	18710*	130

40' Jib length

	140 ft			150 ft			160 ft			170 ft			
	5°	15°	25°	5°	15°	25°	5°	15°	25°	5°	15°	25°	
ft	lb	lb	lb	lb	lb	lb	lb	lb	lb	lb	lb	lb	ft
35	32000*	-	-	-	-	-	-	-	-	-	-	-	35
36	32000*	-	-	32000*	-	-	-	-	-	-	-	-	36
37	32000*	-	-	32000*	-	-	32000*	-	-	-	-	-	37
38	32000*	-	-	32000*	-	-	32000*	-	-	-	-	-	38
39	32000*	-	-	32000*	-	-	32000*	-	-	32000*	-	-	39
40	32000*	-	-	32000*	-	-	32000*	-	-	32000*	-	-	40
50	32000*	32000*	32000*	32000*	32000*	32000*	32000*	32000*	32000*	32000*	32000*	-	50
60	32000*	32000*	30130*	32000*	32000*	30600*	32000*	32000*	31160*	32000*	32000*	31560*	60
70	32000*	32000*	27600*	32000*	32000*	28110*	32000*	32000*	28660*	32000*	32000*	29150*	70
80	32000*	32000*	25600*	32000*	32000*	26080*	32000*	32000*	26680*	32000*	32000*	27080*	80
90	32000*	31670*	23800*	32000*	32000*	24370*	32000*	32000*	24930*	32000*	32000*	25360*	90
100	32000*	29090*	22380*	32000*	30070*	22870*	32000*	31080*	23420*	32000*	32000*	23890*	100
110	32000*	26930*	21110*	32000*	27880*	21620*	32000*	28890*	22160*	32000*	29850*	22610*	110
120	30010*	25160*	20090*	31350*	26120*	20540*	32000*	26960*	21040*	32000*	27860*	21560*	120
130	27870*	23620*	19220*	29130*	24500*	19630*	30370*	25360*	20100*	31630*	26170*	20590*	130
140	25970*	22310*	18430*	27190*	23110*	18900*	28340*	23960*	19340*	29560*	24710*	19700*	140
150	-	-	-	25550*	21960*	18190*	26680*	22740*	18570*	27690*	23440*	19020*	150
160	-	-	-	-	-	-	25100*	21660*	18060*	26160*	22380*	18370*	160
170	-	-	-	-	-	-	-	-	-	24780*	21390*	17900*	170

Asterisk (*) areas on this chart indicate ratings that are limited by strength of material or factors other than stability (tipping)

LOAD CHART

HC 285

With 92HI Offset Tip Boom + 16HL Fixed Jib

207,000 lb + 56,000 lb CB | 360° | ANSI B 30.5

40' Jib length

	180 ft			190 ft			200 ft			210 ft			
	5°	15°	25°	5°	15°	25°	5°	15°	25°	5°	15°	25°	
ft	lb	lb	lb	lb	lb	lb	lb	lb	lb	lb	lb	lb	ft
40	32000*	-	-	-	-	-	-	-	-	-	-	-	40
41	32000*	-	-	32000*	-	-	-	-	-	-	-	-	41
42	32000*	-	-	32000*	-	-	-	-	-	-	-	-	42
43	32000*	-	-	32000*	-	-	32000*	-	-	-	-	-	43
44	32000*	-	-	32000*	-	-	32000*	-	-	32000*	-	-	44
50	32000*	32000*	-	32000*	32000*	-	32000*	32000*	-	32000*	-	-	50
60	32000*	32000*	31910*	32000*	32000*	32000*	32000*	32000*	32000*	32000*	32000*	32000*	60
70	32000*	32000*	29630*	32000*	32000*	30020*	32000*	32000*	30400*	32000*	32000*	30830*	70
80	32000*	32000*	27610*	32000*	32000*	28070*	32000*	32000*	28490*	32000*	32000*	28880*	80
90	32000*	32000*	25840*	32000*	32000*	26290*	32000*	32000*	26740*	32000*	32000*	27140*	90
100	32000*	32000*	24420*	32000*	32000*	24860*	32000*	32000*	25290*	32000*	32000*	25660*	100
110	32000*	30670*	23100*	32000*	31570*	23590*	32000*	32000*	23950*	32000*	32000*	24380*	110
120	32000*	28680*	22020*	32000*	29540*	22410*	32000*	30350*	22790*	32000*	31130*	23170*	120
130	32000*	26990*	20950*	32000*	27840*	21410*	32000*	28600*	21850*	32000*	29340*	22210*	130
140	30720*	25440*	20140*	31900*	26290*	20500*	32000*	26950*	20890*	32000*	27740*	21250*	140
150	28870*	24210*	19390*	29860*	24860*	19770*	30340	25640*	20120*	29740	26270*	20460*	150
160	27150*	23050*	18770*	27960	23690*	19060*	27340	24320*	19400*	26730	25000*	19820*	160
170	25740*	22040*	18160*	25350	22630*	18460*	24710	23280*	18860*	24100	23950*	19110*	170
180	23650	21170*	17720*	23040	21770*	18040*	22410	22330*	18290*	21790	21800	18610*	180
190	-	-	-	20990	20950*	17620*	20360	20370	17850*	19750	19760	18130*	190
200	-	-	-	-	-	-	18540	18550	17520*	17920	17930	17750*	200
210	-	-	-	-	-	-	-	-	-	16290	16300	16320	210

40' Jib length

	220 ft			230 ft			240 ft			250 ft			
	5°	15°	25°	5°	15°	25°	5°	15°	25°	5°	15°	25°	
ft	lb	lb	lb	lb	lb	lb	lb	lb	lb	lb	lb	lb	ft
46	32000*	-	-	-	-	-	-	-	-	-	-	-	46
47	32000*	-	-	32000*	-	-	-	-	-	-	-	-	47
48	32000*	-	-	32000*	-	-	32000*	-	-	-	-	-	48
49	32000*	-	-	32000*	-	-	32000*	-	-	-	-	-	49
50	32000*	-	-	32000*	-	-	32000*	-	-	32000*	-	-	50
60	32000*	32000*	32000*	32000*	32000*	32000*	32000*	32000*	-	32000*	32000*	-	60
70	32000*	32000*	31200*	32000*	32000*	31510*	32000*	32000*	31860*	32000*	32000*	32000*	70
80	32000*	32000*	29250*	32000*	32000*	29580*	32000*	32000*	29860*	32000*	32000*	30200*	80
90	32000*	32000*	27540*	32000*	32000*	27920*	32000*	32000*	28210*	32000*	32000*	28580*	90
100	32000*	32000*	26060*	32000*	32000*	26370*	32000*	32000*	26740*	32000*	32000*	27100*	100
110	32000*	32000*	24710*	32000*	32000*	25170*	32000*	32000*	25450*	32000*	32000*	25790*	110
120	32000*	31910*	23620*	32000*	32000*	23970*	32000*	32000*	24290*	32000*	32000*	24650*	120
130	32000*	30100*	22600*	32000*	30760*	22910*	32000*	31460*	23320*	32000*	32000*	23580*	130
140	32000*	28450*	21690*	32000*	29130*	21990*	31660	29840*	22330*	31060	30430*	22640*	140
150	29120	26970*	20830*	28770	27650*	21220*	28190	28190	21530*	27580	27590	21800*	150
160	26110	25710*	20150*	25760	25770	20410*	25180	25180	20800*	24570	24580	21050*	160
170	23490	23490	19470*	23140	23140	19770*	22550	22560	20060*	21930	21940	20440*	170
180	21180	21180	18890*	20830	20830	19180*	20240	20240	19450*	19620	19620	19630	180
190	19120	19130	18410*	18780	18780	18700*	18170	18180	18190	17560	17570	17580	190
200	17300	17310	17320	16940	16950	16960	16350	16350	16370	15730	15740	15750	200
210	15660	15660	15680	15300	15310	15330	14700	14710	14730	14090	14090	14110	210
220	14190	14200	14210	13830	13840	13850	13230	13230	13250	12610	12610	12630	220
230	-	-	-	12500	12510	12530	11890	11900	11920	11270	11280	11290	230
240	-	-	-	-	-	-	10690	10700	10720	10060	10070	10080	240
250	-	-	-	-	-	-	-	-	-	8960	8970	8980	250

Asterisk (*) areas on this chart indicate ratings that are limited by strength of material or factors other than stability (tipping)

LOAD CHART

HC 285

With 92HI Offset Tip Boom + 16HL Fixed Jib

207,000 lb + 56,000 lb CB | **360°** | **ANSI B 30.5**

40' Jib length

	260 ft			270 ft			280 ft			
	5°	15°	25°	5°	15°	25°	5°	15°	25°	
ft	lb	lb	lb	lb	lb	lb	lb	lb	lb	ft
51	32000*	-	-	-	-	-	-	-	-	51
52	32000*	-	-	-	-	-	-	-	-	52
53	32000*	-	-	32000*	-	-	-	-	-	53
54	32000*	-	-	32000*	-	-	32000*	-	-	54
60	32000*	32000*	-	32000*	32000*	-	32000*	-	-	60
70	32000*	32000*	32000*	32000*	32000*	32000*	32000*	32000*	32000*	70
80	32000*	32000*	30500*	32000*	32000*	30750*	32000*	32000*	31020*	80
90	32000*	32000*	28900*	32000*	32000*	29190*	32000*	32000*	29410*	90
100	32000*	32000*	27430*	32000*	32000*	27700*	32000*	32000*	28090*	100
110	32000*	32000*	26180*	32000*	32000*	26490*	32000*	32000*	26790*	110
120	32000*	32000*	24990*	32000*	32000*	25340*	32000*	32000*	25580*	120
130	32000*	32000*	23970*	32000*	32000*	24270*	32000*	32000*	24560*	130
140	30470	30470	22980*	29870	29880	23340*	29480	29490	23590*	140
150	26980	26990	22110*	26390	26390	22420*	26000	26000	22740*	150
160	23970	23970	21420*	23370	23380	21700*	22980	22990	21980*	160
170	21340	21340	20710*	20730	20740	20750	20350	20350	20360	170
180	19020	19020	19040	18410	18420	18430	18030	18030	18040	180
190	16960	16970	16980	16350	16360	16370	15980	15980	16000	190
200	15130	15140	15150	14520	14530	14540	14130	14140	14150	200
210	13480	13490	13500	12870	12880	12890	12490	12490	12510	210
220	12000	12000	12020	11390	11400	11410	11000	11010	11020	220
230	10660	10660	10680	10040	10050	10060	9650	9660	9670	230
240	9440	9450	9470	8820	8830	8840	8430	8440	8450	240
250	8330	8340	8360	7710	7710	7730	7320	7330	7350	250
260	7320	7330	7350	6700	6710	6720	6300	6310	6320	260
270	-	-	-	5770	5780	5800	5370	5380	5400	270
280	-	-	-	-	-	-	4530	4540	4550	280

Asterisk (*) areas on this chart indicate ratings that are limited by strength of material or factors other than stability (tipping)

LOAD CHART

HC 285

With 92HI Offset Tip Boom + 16HL Fixed Jib

207,000 lb + 56,000 lb CB | 360° | ANSI B 30.5

50' Jib length

	130 ft			140 ft			150 ft			160 ft			
	5°	15°	25°	5°	15°	25°	5°	15°	25°	5°	15°	25°	
ft	lb	lb	lb	lb	lb	lb	lb	lb	lb	lb	lb	lb	ft
35	32000*	-	-	-	-	-	-	-	-	-	-	-	35
37	32000*	-	-	32000*	-	-	-	-	-	-	-	-	37
38	32000*	-	-	32000*	-	-	32000*	-	-	-	-	-	38
40	32000*	-	-	32000*	-	-	32000*	-	-	32000*	-	-	40
45	32000*	-	-	32000*	-	-	32000*	-	-	32000*	-	-	45
47	31860*	-	-	32000*	-	-	32000*	-	-	32000*	-	-	47
48	31720*	-	-	31910*	-	-	32000*	-	-	32000*	-	-	48
49	31600*	-	-	31770*	-	-	31920*	-	-	32000*	-	-	49
50	31480*	29020*	-	31700*	29070*	-	31790*	29160*	-	32000*	29180*	-	50
51	31340*	28850*	26900*	31590*	29010*	-	31780*	29090*	-	31860*	29100*	-	51
52	31250*	28770*	26820*	31410*	28870*	-	31680*	29030*	-	31730*	29050*	-	52
53	31040*	28750*	26800*	31310*	28840*	26860*	31570*	28860*	-	31710*	28920*	-	53
54	30970*	28610*	26680*	31260*	28690*	26780*	31340*	28820*	26830*	31600*	28870*	-	54
55	30850*	28450*	26400*	31050*	28670*	26700*	31260*	28760*	26730*	31510*	28770*	-	55
56	30800*	28480*	26120*	30990*	28550*	26510*	31190*	28620*	26720*	31370*	28720*	26750*	56
60	30340*	28100*	25190*	30560*	28200*	25620*	30690*	28310*	25980*	30920*	28450*	26290*	60
70	29290*	27300*	23020*	29530*	27440*	23430*	29710*	27570*	23810*	29910*	27760*	24230*	70
80	28280*	26580*	21240*	28640*	26720*	21710*	28840*	26920*	22050*	29030*	27100*	22490*	80
90	27410*	25900*	19760*	27730*	26110*	20180*	27990*	26250*	20630*	28240*	26470*	21040*	90
100	26690*	23770*	18510*	26990*	24650*	18930*	27330*	25420*	19380*	27570*	25940*	19740*	100
110	25980*	22020*	17420*	26380*	22760*	17850*	26590*	23570*	18240*	26850*	24320*	18680*	110
120	24550*	20510*	16530*	25740*	21280*	16940*	25980*	22000*	17290*	26250*	22740*	17710*	120
130	22840*	19260*	15730*	23920*	19990*	16140*	24920*	20630*	16500*	25670*	21290*	16900*	130
140	-	-	-	22310*	18860*	15450*	23240*	19440*	15830*	24210*	20130*	16130*	140
150	-	-	-	-	-	-	21780*	18460*	15240*	22760*	19050*	15550*	150
160	-	-	-	-	-	-	-	-	-	21380*	18120*	14990*	160

50' Jib length

	170 ft			180 ft			190 ft			200 ft			
	5°	15°	25°	5°	15°	25°	5°	15°	25°	5°	15°	25°	
ft	lb	lb	lb	lb	lb	lb	lb	lb	lb	lb	lb	lb	ft
41	32000*	-	-	-	-	-	-	-	-	-	-	-	41
42	32000*	-	-	32000*	-	-	-	-	-	-	-	-	42
44	32000*	-	-	32000*	-	-	32000*	-	-	-	-	-	44
45	32000*	-	-	32000*	-	-	32000*	-	-	32000*	-	-	45
50	32000*	29220*	-	32000*	-	-	32000*	-	-	32000*	-	-	50
60	31090*	28530*	26530*	31210*	28590*	26520*	31350*	28640*	26510*	31490*	28620*	-	60
70	30190*	27820*	24600*	30280*	27920*	24900*	30430*	27960*	25180*	30660*	28040*	25410*	70
80	29260*	27210*	22800*	29510*	27320*	23160*	29620*	27420*	23490*	29830*	27430*	23820*	80
90	28530*	26540*	21390*	28640*	26670*	21700*	28860*	26820*	22040*	29100*	26930*	22400*	90
100	27790*	26020*	20090*	28010*	26210*	20470*	28210*	26280*	20830*	28350*	26440*	21150*	100
110	27110*	25050*	19020*	27390*	25670*	19390*	27510*	25790*	19730*	27710*	25880*	19990*	110
120	26530*	23330*	18050*	26780*	24060*	18420*	26950*	24690*	18750*	27210*	25340*	19060*	120
130	25930*	21960*	17230*	26150*	22600*	17570*	26440*	23240*	17880*	26600*	23770*	18160*	130
140	25170*	20700*	16480*	25700*	21360*	16840*	25850*	21910*	17150*	26080*	22440*	17400*	140
150	23640*	19630*	15830*	24510*	20200*	16150*	25420*	20770*	16480*	25610*	21320*	16720*	150
160	22200*	18710*	15290*	23100*	19280*	15600*	23930*	19790*	15850*	24770*	20270*	16160*	160
170	21030*	17840*	14820*	21860*	18400*	15080*	22630*	18860*	15330*	23380*	19360*	15640*	170
180	-	-	-	20710*	17640*	14710*	21410*	18110*	14900*	22170*	18550*	15180*	180
190	-	-	-	-	-	-	20420*	17390*	14520*	20730	17820*	14760*	190
200	-	-	-	-	-	-	-	-	-	18900	17200*	14410*	200

Asterisk (*) areas on this chart indicate ratings that are limited by strength of material or factors other than stability (tipping)

LOAD CHART

HC 285

With 92HI Offset Tip Boom + 16HL Fixed Jib

207,000 lb + 56,000 lb CB | 360° | ANSI B 30.5

50' Jib length

	210 ft			220 ft			230 ft			240 ft			
	5°	15°	25°	5°	15°	25°	5°	15°	25°	5°	15°	25°	
ft	lb	lb	lb	lb	lb	lb	lb	lb	lb	lb	lb	lb	ft
47	32000*	-	-	-	-	-	-	-	-	-	-	-	47
48	32000*	-	-	32000*	-	-	-	-	-	-	-	-	48
49	32000*	-	-	32000*	-	-	32000*	-	-	-	-	-	49
50	32000*	-	-	32000*	-	-	32000*	-	-	-	-	-	50
51	32000*	-	-	32000*	-	-	32000*	-	-	32000*	-	-	51
55	32000*	29060*	-	32000*	-	-	32000*	-	-	32000*	-	-	55
56	31930*	28960*	-	32000*	28940*	-	32000*	-	-	32000*	-	-	56
60	31550*	28750*	-	31640*	28710*	-	31710*	28700*	-	31690*	28750*	-	60
70	30730*	28120*	25720*	30800*	28120*	26000*	30870*	28100*	26020*	30980*	28110*	26000*	70
80	29900*	27540*	24030*	30060*	27550*	24320*	30130*	27610*	24560*	30280*	27680*	24810*	80
90	29190*	26960*	22630*	29420*	27060*	22940*	29410*	27130*	23200*	29600*	27200*	23470*	90
100	28580*	26460*	21400*	28670*	26570*	21730*	28840*	26650*	21940*	28930*	26670*	22230*	100
110	27870*	26060*	20330*	28130*	26110*	20630*	28230*	26160*	20890*	28320*	26280*	21130*	110
120	27330*	25580*	19350*	27570*	25670*	19610*	27630*	25730*	19930*	27770*	25890*	20210*	120
130	26790*	24440*	18440*	26930*	25030*	18790*	27170*	25410*	19040*	27240*	25460*	19300*	130
140	26340*	23090*	17750*	26490*	23570*	17990*	26570*	24120*	18270*	26730*	24620*	18490*	140
150	25830*	21870*	17060*	26010*	22440*	17290*	26190*	22890*	17580*	26310*	23400*	17800*	150
160	25410*	20820*	16400*	25580*	21290*	16690*	25720*	21790*	16940*	25530	22280*	17150*	160
170	24170*	19910*	15860*	23860	20390*	16120*	23500	20810*	16370*	22900	21260*	16620*	170
180	22160	19060*	15410*	21550	19470*	15670*	21190	19990*	15900*	20590	20390*	16090*	180
190	20110	18320*	14990*	19490	18720*	15200*	19130	19130*	15400*	18530	18540	15640*	190
200	18280	17620*	14590*	17660	17670	14790*	17300	17310	14990*	16700	16710	15220*	200
210	16650	16660	14320*	16020	16030	14470*	15660	15670	14650*	15060	15070	14830*	210
220	-	-	-	14550	14560	14210*	14190	14200	14210	13590	13590	13610	220
230	-	-	-	-	-	-	12840	12850	12870	12240	12250	12270	230
240	-	-	-	-	-	-	-	-	-	11030	11040	11060	240

50' Jib length

	250 ft			260 ft			270 ft			280 ft			
	5°	15°	25°	5°	15°	25°	5°	15°	25°	5°	15°	25°	
ft	lb	lb	lb	lb	lb	lb	lb	lb	lb	lb	lb	lb	ft
52	32000*	-	-	-	-	-	-	-	-	-	-	-	52
53	32000*	-	-	32000*	-	-	-	-	-	-	-	-	53
54	32000*	-	-	32000*	-	-	32000*	-	-	-	-	-	54
55	32000*	-	-	32000*	-	-	32000*	-	-	-	-	-	55
56	32000*	-	-	32000*	-	-	32000*	-	-	31980*	-	-	56
60	31770*	28690*	-	31810*	-	-	31880*	-	-	31710*	-	-	60
70	31130*	28150*	26050*	31120*	28240*	26030*	31090*	28170*	-	31020*	28070*	-	70
80	30390*	27730*	25030*	30360*	27650*	25240*	30430*	27670*	25470*	30320*	27640*	25490*	80
90	29720*	27170*	23720*	29800*	27220*	23940*	29850*	27220*	24170*	29770*	27180*	24350*	90
100	29050*	26740*	22500*	29150*	26770*	22700*	29200*	26840*	22910*	29210*	26730*	23190*	100
110	28470*	26350*	21440*	28580*	26420*	21630*	28610*	26440*	21880*	28660*	26370*	22100*	110
120	27970*	25890*	20420*	27980*	25980*	20660*	28090*	26030*	20940*	28040*	25930*	21120*	120
130	27430*	25530*	19530*	27520*	25610*	19830*	27570*	25680*	20060*	27610*	25610*	20290*	130
140	26930*	25170*	18770*	27070*	25280*	19030*	27190*	25290*	19220*	27180*	25300*	19490*	140
150	26510*	23890*	18090*	26610*	24380*	18320*	26680*	24880*	18560*	26350	24970*	18720*	150
160	24930	22760*	17410*	24330	23250*	17690*	23730	23730*	17900*	23340	23340	18110*	160
170	22300	21730*	16840*	21700	21710	17040*	21100	21100	17300*	20700	20710	17490*	170
180	19980	19990	16340*	19380	19390	16520*	18780	18780	16730*	18380	18390	17000*	180
190	17920	17930	15880*	17320	17330	16040*	16720	16720	16230*	16320	16330	16340	190
200	16090	16100	15450*	15480	15490	15500	14870	14880	14890	14480	14490	14510	200
210	14440	14450	14470	13840	13850	13860	13230	13240	13250	12840	12850	12860	210
220	12960	12970	12980	12350	12360	12380	11740	11750	11760	11350	11350	11370	220
230	11620	11630	11640	11010	11020	11030	10390	10400	10420	10000	10010	10020	230
240	10400	10410	10430	9790	9800	9820	9170	9180	9200	8770	8780	8800	240
250	9290	9300	9320	8680	8690	8700	8060	8070	8090	7660	7670	7690	250
260	-	-	-	7670	7680	7700	7040	7050	7070	6650	6650	6670	260
270	-	-	-	-	-	-	6110	6120	6150	5700	5710	5730	270
280	-	-	-	-	-	-	-	-	-	4850	4860	4880	280

Asterisk (*) areas on this chart indicate ratings that are limited by strength of material or factors other than stability (tipping)

LOAD CHART

HC 285

With 92HI Offset Tip Boom + 16HL Fixed Jib

207,000 lb + 56,000 lb CB | 360° | ANSI B 30.5

60' Jib length

	150 ft			160 ft			170 ft			180 ft			
	5°	15°	25°	5°	15°	25°	5°	15°	25°	5°	15°	25°	
ft	lb	lb	lb	lb	lb	lb	lb	lb	lb	lb	lb	lb	ft
40	30360*	-	-	-	-	-	-	-	-	-	-	-	40
41	30210*	-	-	-	-	-	-	-	-	-	-	-	41
42	30070*	-	-	30170*	-	-	-	-	-	-	-	-	42
43	29960*	-	-	30010*	-	-	30080*	-	-	-	-	-	43
44	29840*	-	-	29970*	-	-	29980*	-	-	-	-	-	44
45	29720*	-	-	29870*	-	-	29880*	-	-	29950*	-	-	45
50	29110*	26370*	-	29220*	-	-	29330*	-	-	29400*	-	-	50
51	29040*	26230*	-	29090*	-	-	29290*	-	-	29370*	-	-	51
52	28930*	26180*	-	28980*	26170*	-	29160*	-	-	29170*	-	-	52
53	28710*	26030*	-	28870*	26110*	-	29040*	26230*	-	29170*	-	-	53
54	28650*	26000*	-	28760*	26060*	-	28890*	26140*	-	29050*	-	-	54
55	28570*	25870*	-	28670*	26020*	-	28790*	26090*	-	28940*	26000*	-	55
60	27960*	25510*	22750*	28220*	25580*	-	28360*	25670*	-	28370*	25740*	-	60
70	27010*	24720*	20920*	27140*	24870*	21130*	27310*	24950*	21390*	27540*	24970*	21590*	70
80	26080*	24080*	19340*	26290*	24170*	19600*	26450*	24330*	19920*	26620*	24400*	20150*	80
90	25180*	23450*	17980*	25490*	23580*	18340*	25690*	23660*	18630*	25840*	23780*	18900*	90
100	24420*	22180*	16900*	24690*	22810*	17170*	24980*	23150*	17510*	25130*	23250*	17750*	100
110	23790*	20510*	15920*	24050*	21160*	16190*	24270*	21770*	16520*	24450*	22300*	16750*	110
120	23090*	19170*	15090*	23350*	19750*	15360*	23630*	20280*	15630*	23860*	20860*	15900*	120
130	21880*	17990*	14310*	22710*	18490*	14630*	23060*	19000*	14930*	23250*	19550*	15150*	130
140	20320*	16890*	13690*	21150*	17400*	13980*	21960*	17920*	14220*	22690*	18400*	14510*	140
150	19040*	15990*	13170*	19790*	16530*	13410*	20580*	16990*	13700*	21330*	17480*	13920*	150
160	-	-	-	18680*	15710*	12920*	19370*	16120*	13170*	20070*	16630*	13420*	160
170	-	-	-	-	-	-	18280*	15400*	12760*	18970*	15820*	12940*	170
180	-	-	-	-	-	-	-	-	-	17990*	15180*	12550*	180

60' Jib length

	190 ft			200 ft			210 ft			220 ft			
	5°	15°	25°	5°	15°	25°	5°	15°	25°	5°	15°	25°	
ft	lb	lb	lb	lb	lb	lb	lb	lb	lb	lb	lb	lb	ft
46	29880*	-	-	-	-	-	-	-	-	-	-	-	46
47	29740*	-	-	29960*	-	-	-	-	-	-	-	-	47
48	29660*	-	-	29740*	-	-	-	-	-	-	-	-	48
49	29660*	-	-	29690*	-	-	29760*	-	-	-	-	-	49
50	29480*	-	-	29660*	-	-	29680*	-	-	29720*	-	-	50
56	28900*	26030*	-	29040*	-	-	29080*	-	-	29180*	-	-	56
57	28800*	25980*	-	28930*	25930*	-	28970*	-	-	29060*	-	-	57
58	28710*	25820*	-	28820*	25880*	-	28970*	-	-	28930*	-	-	58
59	28640*	25780*	-	28720*	25820*	-	28880*	25920*	-	28920*	-	-	59
60	28560*	25750*	-	28640*	25770*	-	28780*	25860*	-	28820*	25860*	-	60
70	27630*	25080*	21850*	27830*	25180*	22020*	27840*	25150*	22250*	28040*	25170*	22390*	70
80	26840*	24450*	20350*	26990*	24510*	20600*	27060*	24640*	20840*	27210*	24620*	21030*	80
90	26060*	23850*	19130*	26150*	23980*	19330*	26340*	24080*	19570*	26510*	24070*	19780*	90
100	25300*	23340*	18040*	25540*	23500*	18280*	25640*	23520*	18460*	25820*	23620*	18720*	100
110	24620*	22780*	17020*	24900*	22970*	17310*	25040*	23030*	17520*	25160*	23160*	17730*	110
120	24050*	21340*	16170*	24290*	21880*	16450*	24380*	22300*	16690*	24550*	22730*	16890*	120
130	23510*	20040*	15450*	23720*	20560*	15690*	23830*	20980*	15900*	24060*	21480*	16100*	130
140	22940*	18940*	14750*	23210*	19370*	15000*	23340*	19870*	15220*	23550*	20300*	15420*	140
150	22070*	17920*	14170*	22700*	18400*	14420*	22860*	18770*	14630*	23030*	19270*	14870*	150
160	20730*	17040*	13660*	21450*	17460*	13870*	22120*	17900*	14070*	22550*	18320*	14300*	160
170	19640*	16240*	13200*	20290*	16640*	13370*	20910*	17040*	13570*	21580*	17440*	13770*	170
180	18620*	15560*	12780*	19170*	15930*	12990*	19820*	16360*	13140*	20400*	16690*	13350*	180
190	17700*	14930*	12400*	18290*	15330*	12610*	18850*	15640*	12810*	19390*	16060*	12950*	190
200	-	-	-	17400*	14750*	12290*	17960*	15060*	12440*	18010	15400*	12630*	200
210	-	-	-	-	-	-	16990	14580*	12180*	16360	14900*	12330*	210
220	-	-	-	-	-	-	-	-	-	14890	14430*	12080*	220

Asterisk (*) areas on this chart indicate ratings that are limited by strength of material or factors other than stability (tipping)

TEREX®

LOAD CHART

HC 285

With 92HI Offset Tip Boom + 16HL Fixed Jib

207,000 lb + 56,000 lb CB | **360°** | **ANSI B 30.5**

60' Jib length

	230 ft			240 ft			250 ft			260 ft			
	5°	15°	25°	5°	15°	25°	5°	15°	25°	5°	15°	25°	
ft	lb	lb	lb	lb	lb	lb	lb	lb	lb	lb	lb	lb	ft
52	29460*	-	-	-	-	-	-	-	-	-	-	-	52
53	29390*	-	-	29450*	-	-	-	-	-	-	-	-	53
54	29340*	-	-	29390*	-	-	29430*	-	-	-	-	-	54
55	29300*	-	-	29210*	-	-	29300*	-	-	-	-	-	55
56	29120*	-	-	29120*	-	-	29250*	-	-	29270*	-	-	56
60	28820*	-	-	28880*	-	-	28950*	-	-	28910*	-	-	60
70	28070*	25220*	-	28110*	25220*	-	28130*	25220*	-	28170*	25200*	-	70
80	27230*	24680*	21240*	27350*	24650*	21410*	27440*	24740*	21550*	27490*	24780*	21710*	80
90	26530*	24130*	20010*	26650*	24190*	20190*	26740*	24200*	20350*	26850*	24230*	20500*	90
100	25850*	23640*	18940*	25990*	23730*	19070*	26140*	23780*	19290*	26240*	23790*	19470*	100
110	25240*	23170*	17980*	25420*	23260*	18140*	25600*	23340*	18360*	25600*	23430*	18530*	110
120	24690*	22780*	17110*	24900*	22890*	17330*	25040*	22900*	17510*	25100*	22990*	17660*	120
130	24150*	21950*	16380*	24280*	22350*	16560*	24430*	22540*	16780*	24530*	22570*	16970*	130
140	23680*	20700*	15700*	23830*	21170*	15870*	23920*	21510*	16070*	24070*	21970*	16220*	140
150	23160*	19690*	15050*	23360*	20040*	15270*	23500*	20490*	15440*	23590*	20830*	15630*	150
160	22770*	18660*	14480*	22860*	19080*	14720*	23040*	19460*	14870*	23190*	19810*	15040*	160
170	22150*	17860*	14010*	22510*	18200*	14200*	22640	18550*	14360*	22040	18960*	14590*	170
180	21040*	17040*	13570*	20930	17460*	13750*	20320	17810*	13950*	19720	18110*	14090*	180
190	19460	16400*	13160*	18870	16730*	13320*	18260	17050*	13500*	17660	17380*	13700*	190
200	17630	15750*	12780*	17040	16080*	12990*	16430	16410*	13100*	15820	15830	13270*	200
210	16000	15180*	12470*	15390	15400	12640*	14780	14790	12770*	14180	14190	12950*	210
220	14520	14530	12170*	13920	13930	12340*	13290	13300	12460*	12690	12700	12630*	220
230	13180	13190	11940*	12580	12590	12100*	11960	11970	11990	11340	11350	11370	230
240	-	-	-	11360	11370	11400	10730	10740	10760	10120	10130	10150	240
250	-	-	-	-	-	-	9630	9640	9660	9010	9020	9040	250
260	-	-	-	-	-	-	-	-	-	7990	8000	8020	260

60' Jib length

	270 ft			280 ft			
	5°	15°	25°	5°	15°	25°	
ft	lb	lb	lb	lb	lb	lb	ft
57	29130*	-	-	-	-	-	57
58	29070*	-	-	-	-	-	58
59	29020*	-	-	28830*	-	-	59
60	28970*	-	-	28750*	-	-	60
70	28150*	25200*	-	28040*	25070*	-	70
80	27550*	24670*	21820*	27440*	24640*	21980*	80
90	26910*	24270*	20720*	26790*	24200*	20800*	90
100	26280*	23810*	19620*	26240*	23790*	19810*	100
110	25670*	23450*	18680*	25640*	23340*	18890*	110
120	25210*	23030*	17890*	25170*	22980*	18060*	120
130	24680*	22640*	17150*	24690*	22640*	17280*	130
140	24160*	22250*	16440*	24220*	22240*	16610*	140
150	23730*	21200*	15800*	23750*	21580*	15960*	150
160	23280*	20220*	15240*	23360*	20540*	15450*	160
170	21430	19280*	14750*	21040	19620*	14920*	170
180	19110	18480*	14230*	18720	18720	14440*	180
190	17050	17060	13820*	16650	16660	14010*	190
200	15210	15220	13470*	14820	14820	13620*	200
210	13570	13580	13060*	13170	13180	13200	210
220	12080	12090	12100	11680	11680	11700	220
230	10730	10740	10760	10340	10340	10360	230
240	9500	9510	9530	9110	9120	9140	240
250	8390	8400	8420	7990	8000	8020	250
260	7380	7390	7410	6960	6970	7000	260
270	6430	6450	6470	6030	6040	6060	270
280	-	-	-	5170	5180	5200	280

Asterisk (*) areas on this chart indicate ratings that are limited by strength of material or factors other than stability (tipping)

LOAD CHART

HC 285

With 92HI Offset Tip Boom + 16HL Fixed Jib

207,000 lb + 56,000 lb CB | 360° | ANSI B 30.5

70' Jib length

	180 ft			190 ft			200 ft			210 ft			
	5°	15°	25°	5°	15°	25°	5°	15°	25°	5°	15°	25°	
ft	lb	lb	lb	lb	lb	lb	lb	lb	lb	lb	lb	lb	ft
47	22290*	-	-	-	-	-	-	-	-	-	-	-	47
48	22260*	-	-	22320*	-	-	-	-	-	-	-	-	48
50	22090*	-	-	22150*	-	-	22190*	-	-	-	-	-	50
51	21980*	-	-	22010*	-	-	22140*	-	-	22200*	-	-	51
58	21380*	19090*	-	21470*	-	-	21600*	-	-	21580*	-	-	58
60	21240*	18970*	-	21340*	18990*	-	21390*	-	-	21520*	-	-	60
61	21110*	18880*	-	21240*	18970*	-	21340*	18950*	-	21360*	-	-	61
70	20490*	18400*	16750*	20590*	18490*	-	20680*	18470*	-	20750*	18540*	-	70
80	19720*	17870*	16340*	19850*	17920*	16340*	20040*	17960*	16410*	20130*	18030*	16370*	80
90	19130*	17350*	15870*	19240*	17420*	15940*	19350*	17540*	15930*	19530*	17590*	15990*	90
100	18550*	16910*	15430*	18680*	17000*	15470*	18820*	17070*	15560*	18950*	17130*	15570*	100
110	17940*	16440*	14630*	18070*	16540*	14830*	18280*	16640*	15010*	18360*	16730*	15200*	110
120	17440*	15920*	13840*	17620*	16060*	14090*	17770*	16210*	14300*	17900*	16350*	14440*	120
130	16910*	15520*	13200*	17090*	15590*	13370*	17280*	15730*	13570*	17400*	15900*	13790*	130
140	16440*	15110*	12590*	16680*	15250*	12820*	16860*	15370*	12970*	16970*	15480*	13150*	140
150	15880*	14750*	12070*	16120*	14840*	12260*	16360*	14990*	12450*	16590*	15130*	12600*	150
160	15480*	14420*	11580*	15670*	14510*	11770*	15910*	14650*	11960*	16060*	14770*	12120*	160
170	15070*	13760*	11200*	15280*	14140*	11360*	15480*	14390*	11560*	15630*	14500*	11720*	170
180	14690*	13190*	10840*	14900*	13510*	10990*	15090*	13850*	11170*	15240*	14140*	11330*	180
190	-	-	-	14510*	12980*	10660*	14730*	13270*	10810*	14880*	13570*	10970*	190
200	-	-	-	-	-	-	14390*	12780*	10510*	14610*	13030*	10670*	200
210	-	-	-	-	-	-	-	-	-	14290*	12580*	10380*	210

70' Jib length

	220 ft			230 ft			240 ft			250 ft			
	5°	15°	25°	5°	15°	25°	5°	15°	25°	5°	15°	25°	
ft	lb	lb	lb	lb	lb	lb	lb	lb	lb	lb	lb	lb	ft
52	22150*	-	-	-	-	-	-	-	-	-	-	-	52
54	21990*	-	-	21980*	-	-	-	-	-	-	-	-	54
55	21870*	-	-	21950*	-	-	21960*	-	-	-	-	-	55
57	21740*	-	-	21800*	-	-	21770*	-	-	21870*	-	-	57
60	21560*	-	-	21580*	-	-	21600*	-	-	21670*	-	-	60
70	20830*	18510*	-	20860*	18580*	-	20930*	18550*	-	20990*	18580*	-	70
80	20210*	18070*	16430*	20260*	18070*	16390*	20340*	18090*	16380*	20440*	18140*	16390*	80
90	19610*	17620*	16040*	19700*	17630*	16080*	19730*	17690*	16090*	19820*	17740*	16090*	90
100	19070*	17180*	15650*	19120*	17240*	15660*	19230*	17240*	15700*	19280*	17340*	15720*	100
110	18530*	16820*	15300*	18620*	16840*	15330*	18670*	16880*	15320*	18840*	16950*	15420*	110
120	18050*	16410*	14630*	18170*	16470*	14820*	18210*	16520*	14960*	18340*	16600*	15060*	120
130	17580*	15980*	13980*	17650*	16090*	14130*	17790*	16160*	14260*	17870*	16260*	14420*	130
140	17130*	15570*	13330*	17280*	15730*	13530*	17370*	15780*	13690*	17490*	15930*	13820*	140
150	16680*	15210*	12800*	16870*	15330*	12990*	16940*	15410*	13130*	17090*	15510*	13280*	150
160	16310*	14900*	12330*	16460*	15010*	12450*	16570*	15070*	12620*	16710*	15220*	12770*	160
170	15870*	14570*	11880*	16020*	14720*	12050*	16190*	14780*	12200*	16340*	14910*	12340*	170
180	15480*	14320*	11470*	15610*	14410*	11630*	15840*	14510*	11760*	15990*	14620*	11940*	180
190	15110*	13860*	11130*	15250*	14150*	11250*	15450*	14280*	11420*	15600*	14380*	11540*	190
200	14770*	13300*	10820*	14910*	13620*	10930*	15100*	13890*	11090*	15240*	14090*	11200*	200
210	14450*	12840*	10530*	14590*	13110*	10670*	14780*	13390*	10790*	14910*	13650*	10940*	210
220	14180*	12400*	10270*	14360*	12660*	10390*	14200	12930*	10500*	13590	13130*	10640*	220
230	-	-	-	13470	12290*	10170*	12860	12490*	10280*	12240	12250	10410*	230
240	-	-	-	-	-	-	11650	11660	10110*	11020	11030	10190*	240
250	-	-	-	-	-	-	-	-	-	9910	9920	9950	250

Asterisk (*) areas on this chart indicate ratings that are limited by strength of material or factors other than stability (tipping)

LOAD CHART

HC 285

With 92HI Offset Tip Boom + 16HL Fixed Jib

207,000 lb + 56,000 lb CB | **360°** | **ANSI B 30.5**

70' Jib length

	260 ft			270 ft			280 ft			
	5°	15°	25°	5°	15°	25°	5°	15°	25°	
ft	lb	lb	lb	lb	lb	lb	lb	lb	lb	ft
58	21780*	-	-	-	-	-	-	-	-	58
60	21650*	-	-	21770*	-	-	-	-	-	60
61	21650*	-	-	21740*	-	-	21580*	-	-	61
70	21090*	18610*	-	21100*	-	-	21070*	-	-	70
80	20500*	18120*	16360*	20490*	18140*	-	20460*	18080*	-	80
90	19940*	17720*	16040*	19940*	17760*	16060*	19930*	17710*	15980*	90
100	19420*	17340*	15750*	19480*	17340*	15730*	19480*	17390*	15730*	100
110	18920*	16970*	15390*	18960*	16990*	15440*	18960*	17040*	15470*	110
120	18450*	16650*	15130*	18510*	16680*	15120*	18550*	16690*	15150*	120
130	18010*	16270*	14610*	18100*	16330*	14700*	18170*	16360*	14830*	130
140	17580*	15970*	13970*	17700*	16050*	14100*	17730*	16040*	14260*	140
150	17220*	15650*	13410*	17300*	15700*	13570*	17370*	15790*	13700*	150
160	16810*	15280*	12910*	16890*	15390*	13040*	16950*	15440*	13210*	160
170	16490*	14990*	12500*	16590*	15110*	12620*	16680*	15140*	12770*	170
180	16110*	14700*	12080*	16280*	14810*	12190*	16290*	14890*	12320*	180
190	15790*	14440*	11700*	15950*	14540*	11850*	16000*	14600*	11970*	190
200	15430*	14230*	11330*	15520	14290*	11480*	15110	14360*	11590*	200
210	14470	13900*	11050*	13870	13880	11180*	13460	13470	11290*	210
220	12990	13000	10740*	12380	12390	10860*	11980	11990	11000*	220
230	11640	11650	10500*	11030	11040	10610*	10620	10630	10650	230
240	10410	10420	10270*	9800	9810	9830	9390	9400	9430	240
250	9300	9310	9340	8680	8700	8720	8280	8290	8310	250
260	8280	8290	8310	7660	7680	7700	7260	7270	7290	260
270	-	-	-	6730	6740	6770	6320	6330	6350	270
280	-	-	-	-	-	-	5450	5460	5490	280

Asterisk (*) areas on this chart indicate ratings that are limited by strength of material or factors other than stability (tipping)

LOAD CHART

HC 285

With 92HI Offset Tip Boom + 16HL Fixed Jib

207,000 lb + 56,000 lb CB | **360°** | **ANSI B 30.5**

80' Jib length

	200 ft			210 ft			220 ft			230 ft			
	5°	15°	25°	5°	15°	25°	5°	15°	25°	5°	15°	25°	
ft	lb	lb	lb	lb	lb	lb	lb	lb	lb	lb	lb	lb	ft
52	17370*	-	-	-	-	-	-	-	-	-	-	-	52
53	17350*	-	-	17330*	-	-	-	-	-	-	-	-	53
55	17150*	-	-	17190*	-	-	17230*	-	-	-	-	-	55
56	17080*	-	-	17110*	-	-	17210*	-	-	17220*	-	-	56
60	16800*	-	-	16860*	-	-	16930*	-	-	16970*	-	-	60
70	16120*	14110*	-	16210*	14140*	-	16270*	14170*	-	16340*	14170*	-	70
80	15490*	13650*	12000*	15560*	13730*	12010*	15660*	13760*	11990*	15710*	13710*	-	80
90	14930*	13130*	11600*	15040*	13200*	11600*	15130*	13300*	11660*	15190*	13340*	11660*	90
100	14400*	12640*	11240*	14520*	12740*	11260*	14630*	12820*	11310*	14660*	12870*	11350*	100
110	13900*	12240*	10960*	14000*	12290*	10960*	14130*	12380*	10980*	14200*	12460*	11010*	110
120	13410*	11830*	10680*	13540*	11910*	10700*	13700*	11960*	10740*	13780*	12070*	10760*	120
130	12870*	11420*	10380*	13030*	11520*	10460*	13170*	11620*	10450*	13320*	11690*	10500*	130
140	12390*	11120*	10180*	12540*	11190*	10190*	12730*	11270*	10220*	12840*	11380*	10290*	140
150	11970*	10810*	9950*	12110*	10900*	9990*	12270*	10970*	10010*	12440*	11070*	10060*	150
160	11560*	10520*	9780*	11710*	10600*	9820*	11860*	10710*	9830*	12020*	10790*	9870*	160
170	11210*	10300*	9600*	11350*	10380*	9660*	11540*	10470*	9670*	11640*	10530*	9700*	170
180	10890*	10060*	9460*	11020*	10170*	9530*	11210*	10210*	9520*	11300*	10320*	9540*	180
190	10590*	9870*	9380*	10770*	9940*	9400*	10900*	10020*	9390*	11040*	10070*	9440*	190
200	10330*	9700*	9220*	10490*	9770*	9300*	10620*	9840*	9310*	10750*	9900*	9310*	200
210	-	-	-	10230*	9620*	9090*	10350*	9680*	9200*	10480*	9730*	9240*	210
220	-	-	-	-	-	-	10130*	9530*	8970*	10280*	9580*	9090*	220
230	-	-	-	-	-	-	-	-	-	10040*	9460*	8870*	230

80' Jib length

	240 ft			250 ft			260 ft			270 ft			
	5°	15°	25°	5°	15°	25°	5°	15°	25°	5°	15°	25°	
ft	lb	lb	lb	lb	lb	lb	lb	lb	lb	lb	lb	lb	ft
57	17150*	-	-	-	-	-	-	-	-	-	-	-	57
59	17060*	-	-	17070*	-	-	-	-	-	-	-	-	59
60	16980*	-	-	16990*	-	-	17020*	-	-	-	-	-	60
62	16880*	-	-	16860*	-	-	16930*	-	-	16920*	-	-	62
70	16330*	-	-	16400*	-	-	16460*	-	-	16450*	-	-	70
80	15790*	13770*	-	15830*	13740*	-	15930*	13760*	-	15920*	13800*	-	80
90	15260*	13380*	11690*	15310*	13420*	11660*	15400*	13390*	11680*	15400*	13400*	11690*	90
100	14740*	12960*	11330*	14820*	12990*	11350*	14870*	13010*	11360*	14960*	13080*	11390*	100
110	14320*	12540*	11060*	14390*	12590*	11040*	14450*	12620*	11060*	14520*	12690*	11110*	110
120	13890*	12120*	10770*	13930*	12160*	10810*	14030*	12270*	10830*	14130*	12300*	10840*	120
130	13440*	11760*	10540*	13570*	11800*	10560*	13650*	11880*	10560*	13700*	11960*	10590*	130
140	13000*	11430*	10290*	13160*	11520*	10320*	13280*	11570*	10340*	13350*	11620*	10390*	140
150	12560*	11120*	10100*	12700*	11220*	10110*	12860*	11250*	10160*	12970*	11330*	10180*	150
160	12180*	10830*	9890*	12300*	10920*	9930*	12440*	10980*	9970*	12530*	11040*	9970*	160
170	11780*	10580*	9750*	11950*	10650*	9750*	12070*	10740*	9800*	12170*	10790*	9790*	170
180	11440*	10350*	9560*	11580*	10410*	9620*	11690*	10490*	9610*	11830*	10580*	9630*	180
190	11160*	10150*	9460*	11250*	10200*	9460*	11380*	10270*	9480*	11520*	10320*	9500*	190
200	10870*	9960*	9330*	11000*	10000*	9370*	11120*	10070*	9380*	11190*	10160*	9380*	200
210	10590*	9810*	9250*	10720*	9870*	9240*	10830*	9930*	9280*	10940*	9960*	9270*	210
220	10390*	9650*	9150*	10460*	9710*	9160*	10610*	9760*	9150*	10710*	9790*	9180*	220
230	10150*	9500*	8950*	10260*	9560*	9060*	10360*	9600*	9080*	10450*	9670*	9100*	230
240	9970*	9410*	8780*	10080*	9460*	8870*	10170*	9500*	8930*	10080	9500*	9020*	240
250	-	-	-	9910*	9330*	8700*	9580	9360*	8750*	8970	8980	8840*	250
260	-	-	-	-	-	-	8550	8570	8590	7950	7960	7980	260
270	-	-	-	-	-	-	-	-	-	7010	7020	7050	270

Asterisk (*) areas on this chart indicate ratings that are limited by strength of material or factors other than stability (tipping)

LOAD CHART

HC 285

With 92HI Offset Tip Boom + 16HL Fixed Jib

207,000 lb + 56,000 lb CB | 360° | ANSI B 30.5

80' Jib length

	280 ft			
	5°	15°	25°	
ft	lb	lb	lb	ft
63	16860*	-	-	63
70	16450*	-	-	70
80	15970*	13780*	-	80
90	15440*	13430*	11690*	90
100	15000*	13060*	11370*	100
110	14570*	12710*	11080*	110
120	14130*	12350*	10840*	120
130	13790*	12030*	10600*	130
140	13380*	11660*	10390*	140
150	13060*	11410*	10170*	150
160	12660*	11080*	9990*	160
170	12320*	10870*	9840*	170
180	11960*	10640*	9650*	180
190	11640*	10390*	9510*	190
200	11300*	10180*	9380*	200
210	11040*	10030*	9270*	210
220	10800*	9840*	9190*	220
230	10580*	9710*	9110*	230
240	9680	9570*	9030*	240
250	8550	8570	8590	250
260	7530	7540	7570	260
270	6590	6600	6630	270
280	5730	5740	5770	280

Asterisk (*) areas on this chart indicate ratings that are limited by strength of material or factors other than stability (tipping)

LOAD CHART

HC 285

With 92HI Offset Tip Boom + 16HL Fixed Jib

207,000 lb + 56,000 lb CB | **360°** | **ANSI B 30.5**

90' Jib length

	230 ft			240 ft			250 ft			260 ft			
	5°	15°	25°	5°	15°	25°	5°	15°	25°	5°	15°	25°	
ft	lb	lb	lb	lb	lb	lb	lb	lb	lb	lb	lb	lb	ft
58	13740*	-	-	-	-	-	-	-	-	-	-	-	58
59	13670*	-	-	-	-	-	-	-	-	-	-	-	59
60	13610*	-	-	13650*	-	-	-	-	-	-	-	-	60
61	13550*	-	-	13580*	-	-	13640*	-	-	-	-	-	61
62	13510*	-	-	13570*	-	-	13580*	-	-	13580*	-	-	62
70	13100*	-	-	13130*	-	-	13140*	-	-	13200*	-	-	70
80	12550*	10340*	-	12570*	10400*	-	12620*	10410*	-	12680*	10410*	-	80
90	11970*	9930*	8530*	12040*	9940*	8500*	12110*	9990*	8520*	12190*	10000*	-	90
100	11380*	9550*	8250*	11480*	9580*	8220*	11540*	9600*	8230*	11650*	9620*	8230*	100
110	10830*	9180*	7980*	10950*	9240*	8010*	11040*	9280*	7990*	11150*	9290*	8000*	110
120	10360*	8860*	7760*	10490*	8890*	7770*	10590*	8930*	7760*	10660*	8960*	7780*	120
130	9930*	8550*	7570*	10040*	8590*	7580*	10160*	8620*	7580*	10220*	8670*	7580*	130
140	9560*	8280*	7350*	9650*	8310*	7380*	9760*	8360*	7370*	9840*	8390*	7370*	140
150	9200*	8020*	7200*	9270*	8070*	7220*	9360*	8130*	7230*	9470*	8170*	7210*	150
160	8840*	7820*	7030*	8940*	7860*	7040*	9060*	7910*	7070*	9150*	7940*	7080*	160
170	8550*	7610*	6890*	8650*	7640*	6920*	8750*	7680*	6900*	8830*	7730*	6930*	170
180	8260*	7380*	6750*	8390*	7440*	6780*	8480*	7510*	6780*	8540*	7550*	6800*	180
190	8030*	7210*	6670*	8110*	7260*	6650*	8190*	7320*	6670*	8290*	7350*	6670*	190
200	7790*	7060*	6560*	7890*	7100*	6570*	7970*	7150*	6580*	8050*	7210*	6570*	200
210	7600*	6950*	6490*	7660*	6990*	6460*	7770*	6990*	6470*	7840*	7050*	6490*	210
220	7390*	6820*	6400*	7480*	6850*	6400*	7540*	6890*	6400*	7620*	6900*	6410*	220
230	7230*	6700*	6350*	7310*	6730*	6340*	7370*	6760*	6340*	7440*	6790*	6340*	230
240	-	-	-	7160*	6640*	6320*	7210*	6670*	6310*	7280*	6700*	6280*	240
250	-	-	-	-	-	-	7070*	6590*	6260*	7120*	6590*	6260*	250
260	-	-	-	-	-	-	-	-	-	6980*	6510*	6210*	260

90' Jib length

	270 ft			280 ft			
	5°	15°	25°	5°	15°	25°	
ft	lb	lb	lb	lb	lb	lb	ft
64	13510*	-	-	-	-	-	64
65	13450*	-	-	13460*	-	-	65
70	13200*	-	-	13180*	-	-	70
80	12690*	10430*	-	12730*	10470*	-	80
90	12250*	10010*	-	12290*	10070*	-	90
100	11730*	9650*	8230*	11830*	9700*	8220*	100
110	11240*	9330*	7990*	11310*	9340*	7990*	110
120	10760*	9000*	7800*	10850*	9030*	7780*	120
130	10340*	8730*	7600*	10400*	8740*	7580*	130
140	9920*	8440*	7380*	10000*	8470*	7390*	140
150	9590*	8190*	7220*	9650*	8230*	7240*	150
160	9250*	7980*	7070*	9300*	8010*	7070*	160
170	8920*	7760*	6940*	9000*	7810*	6940*	170
180	8660*	7570*	6800*	8740*	7610*	6820*	180
190	8390*	7390*	6680*	8460*	7410*	6680*	190
200	8150*	7230*	6570*	8200*	7250*	6560*	200
210	7930*	7060*	6480*	7980*	7110*	6490*	210
220	7720*	6940*	6390*	7770*	6980*	6400*	220
230	7500*	6830*	6320*	7570*	6860*	6320*	230
240	7330*	6700*	6280*	7400*	6730*	6270*	240
250	7170*	6610*	6220*	7270*	6630*	6200*	250
260	7060*	6530*	6200*	7120*	6560*	6180*	260
270	6920*	6460*	6180*	6840	6480*	6140*	270
280	-	-	-	5970	5980	6010	280

Asterisk (*) areas on this chart indicate ratings that are limited by strength of material or factors other than stability (tipping)

LOAD CHART

HC 285

With 92HI Offset Tip Boom + 16HL Fixed Jib

207,000 lb + 56,000 lb CB | **360°** | **ANSI B 30.5**

100' Jib length

	250 ft			260 ft			270 ft			
	5°	15°	25°	5°	15°	25°	5°	15°	25°	
ft	lb	lb	lb	lb	lb	lb	lb	lb	lb	ft
63	10260*	-	-	-	-	-	-	-	-	63
64	10220*	-	-	-	-	-	-	-	-	64
65	10140*	-	-	10200*	-	-	-	-	-	65
66	10100*	-	-	10120*	-	-	10170*	-	-	66
70	9840*	-	-	9870*	-	-	9950*	-	-	70
80	9300*	7350*	-	9330*	-	-	9360*	-	-	80
90	8760*	7000*	-	8840*	7010*	-	8860*	7040*	-	90
100	8290*	6720*	5600*	8380*	6720*	5580*	8410*	6720*	5580*	100
110	7890*	6450*	5410*	7960*	6430*	5390*	8020*	6450*	5390*	110
120	7510*	6170*	5230*	7550*	6190*	5220*	7640*	6210*	5200*	120
130	7160*	5950*	5060*	7220*	5950*	5060*	7290*	5980*	5060*	130
140	6860*	5720*	4920*	6910*	5750*	4920*	6960*	5770*	4920*	140
150	6570*	5510*	4800*	6600*	5560*	4790*	6680*	5560*	4770*	150
160	6280*	5330*	4670*	6340*	5360*	4650*	6400*	5380*	4650*	160
170	6030*	5170*	4560*	6110*	5190*	4550*	6160*	5230*	4540*	170
180	5830*	5010*	4440*	5870*	5040*	4450*	5940*	5070*	4430*	180
190	5600*	4890*	4350*	5660*	4910*	4360*	5720*	4930*	4350*	190
200	5420*	4750*	4280*	5470*	4790*	4270*	5550*	4800*	4260*	200
210	5250*	4650*	4210*	5320*	4660*	4200*	5360*	4680*	4180*	210
220	5100*	4540*	4150*	5160*	4560*	4140*	5200*	4580*	4110*	220
230	4960*	4460*	4100*	5020*	4480*	4080*	5050*	4470*	4070*	230
240	4830*	4380*	4060*	4880*	4380*	4030*	4910*	4380*	4020*	240
250	4710*	4320*	4040*	4760*	4310*	4010*	4790*	4310*	3990*	250
260	-	-	-	4650*	4240*	3990*	4700*	4240*	3970*	260
270	-	-	-	-	-	-	4590*	4210*	3950*	270

Asterisk (*) areas on this chart indicate ratings that are limited by strength of material or factors other than stability (tipping)

LOAD CHART

HC 285

With 92HI Offset Tip Boom + 16HL Fixed Jib

180,000 lb + 56,000 lb CB | **360°** | **ANSI B 30.5**

40' Jib length

	100 ft			110 ft			120 ft			130 ft			
	5°	15°	25°	5°	15°	25°	5°	15°	25°	5°	15°	25°	
ft	lb	lb	lb	lb	lb	lb	lb	lb	lb	lb	lb	lb	ft
29	32000*	-	-	-	-	-	-	-	-	-	-	-	29
30	32000*	-	-	32000*	-	-	-	-	-	-	-	-	30
31	32000*	-	-	32000*	-	-	-	-	-	-	-	-	31
32	32000*	-	-	32000*	-	-	32000*	-	-	-	-	-	32
33	32000*	-	-	32000*	-	-	32000*	-	-	32000*	-	-	33
34	32000*	-	-	32000*	-	-	32000*	-	-	32000*	-	-	34
35	32000*	-	-	32000*	-	-	32000*	-	-	32000*	-	-	35
40	32000*	32000*	-	32000*	32000*	-	32000*	32000*	-	32000*	32000*	-	40
50	32000*	32000*	30760*	32000*	32000*	31420*	32000*	32000*	32000*	32000*	32000*	32000*	50
60	32000*	32000*	27580*	32000*	32000*	28230*	32000*	32000*	28880*	32000*	32000*	29500*	60
70	32000*	32000*	24990*	32000*	32000*	25740*	32000*	32000*	26360*	32000*	32000*	27050*	70
80	32000*	29550*	22930*	32000*	30880*	23680*	32000*	32000*	24330*	32000*	32000*	24930*	80
90	31840*	26770*	21280*	32000*	28090*	21920*	32000*	29320*	22610*	32000*	30530*	23230*	90
100	28730*	24590*	19930*	30530*	25710*	20530*	32000*	26880*	21220*	32000*	27980*	21790*	100
110	-	-	-	27830*	23820*	19440*	29470*	24860*	19980*	30980*	25970*	20540*	110
120	-	-	-	-	-	-	27130*	23290*	19000*	28510*	24160*	19530*	120
130	-	-	-	-	-	-	-	-	-	26470*	22730*	18710*	130

40' Jib length

	140 ft			150 ft			160 ft			170 ft			
	5°	15°	25°	5°	15°	25°	5°	15°	25°	5°	15°	25°	
ft	lb	lb	lb	lb	lb	lb	lb	lb	lb	lb	lb	lb	ft
35	32000*	-	-	-	-	-	-	-	-	-	-	-	35
36	32000*	-	-	32000*	-	-	-	-	-	-	-	-	36
37	32000*	-	-	32000*	-	-	32000*	-	-	-	-	-	37
38	32000*	-	-	32000*	-	-	32000*	-	-	-	-	-	38
39	32000*	-	-	32000*	-	-	32000*	-	-	32000*	-	-	39
40	32000*	-	-	32000*	-	-	32000*	-	-	32000*	-	-	40
50	32000*	32000*	32000*	32000*	32000*	32000*	32000*	32000*	32000*	32000*	32000*	-	50
60	32000*	32000*	30130*	32000*	32000*	30600*	32000*	32000*	31160*	32000*	32000*	31560*	60
70	32000*	32000*	27600*	32000*	32000*	28110*	32000*	32000*	28660*	32000*	32000*	29340*	70
80	32000*	32000*	25600*	32000*	32000*	26080*	32000*	32000*	26680*	32000*	32000*	29150*	80
90	32000*	31670*	23800*	32000*	32000*	24370*	32000*	32000*	24930*	32000*	32000*	25360*	90
100	32000*	29090*	22380*	32000*	30070*	22870*	32000*	31080*	23420*	32000*	32000*	23890*	100
110	32000*	26930*	21110*	32000*	27880*	21620*	32000*	28890*	22160*	32000*	29850*	22610*	110
120	30010*	25160*	20090*	31350*	26120*	20540*	32000*	26960*	21040*	32000*	27860*	21560*	120
130	27870*	23620*	19220*	29130*	24500*	19630*	30370*	25360*	20100*	31630*	26170*	20590*	130
140	25970*	22310*	18430*	27190*	23110*	18900*	28340*	23960*	19340*	29560*	24710*	19700*	140
150	-	-	-	25550*	21960*	18190*	26680*	22740*	18570*	27520	23440*	19020*	150
160	-	-	-	-	-	-	25100*	21660*	18060*	24800	22380*	18370*	160
170	-	-	-	-	-	-	-	-	-	22450	21390*	17900*	170

Asterisk (*) areas on this chart indicate ratings that are limited by strength of material or factors other than stability (tipping)

LOAD CHART

HC 285

With 92HI Offset Tip Boom + 16HL Fixed Jib

180,000 lb + 56,000 lb CB | **360°** | **ANSI B 30.5**

40' Jib length

	180 ft			190 ft			200 ft			210 ft			
	5°	15°	25°	5°	15°	25°	5°	15°	25°	5°	15°	25°	
ft	lb	lb	lb	lb	lb	lb	lb	lb	lb	lb	lb	lb	ft
40	32000*	-	-	-	-	-	-	-	-	-	-	-	40
41	32000*	-	-	32000*	-	-	-	-	-	-	-	-	41
42	32000*	-	-	32000*	-	-	-	-	-	-	-	-	42
43	32000*	-	-	32000*	-	-	32000*	-	-	-	-	-	43
44	32000*	-	-	32000*	-	-	32000*	-	-	32000*	-	-	44
50	32000*	32000*	-	32000*	32000*	-	32000*	32000*	-	32000*	-	-	50
60	32000*	32000*	31910*	32000*	32000*	32000*	32000*	32000*	32000*	32000*	32000*	32000*	60
70	32000*	32000*	29630*	32000*	32000*	30020*	32000*	32000*	30400*	32000*	32000*	30830*	70
80	32000*	32000*	27610*	32000*	32000*	28070*	32000*	32000*	28490*	32000*	32000*	28880*	80
90	32000*	32000*	25840*	32000*	32000*	26290*	32000*	32000*	26740*	32000*	32000*	27140*	90
100	32000*	32000*	24420*	32000*	32000*	24860*	32000*	32000*	25290*	32000*	32000*	25660*	100
110	32000*	30670*	23100*	32000*	31570*	23590*	32000*	32000*	23950*	32000*	32000*	24380*	110
120	32000*	28680*	22020*	32000*	29540*	22410*	32000*	30350*	22790*	32000*	31130*	23170*	120
130	32000*	26990*	20950*	32000*	27840*	21410*	32000*	28600*	21850*	32000*	29340*	22210*	130
140	30360	25440*	20140*	29760	26290*	20500*	29140	26950*	20890*	28520	27740*	21250*	140
150	27220	24210*	19390*	26620	24860*	19770*	25990	25640*	20120*	25390	25390	20460*	150
160	24510	23050*	18770*	23900	23690*	19060*	23280	23290	19400*	22670	22680	19820*	160
170	22140	22040*	18160*	21540	21540	18460*	20910	20920	18860*	20300	20310	19110*	170
180	20070	20080	17720*	19460	19460	18040*	18830	18830	18290*	18210	18220	18230	180
190	-	-	-	17610	17620	17620*	16980	16990	17000	16370	16380	16390	190
200	-	-	-	-	-	-	15340	15350	15360	14720	14730	14750	200
210	-	-	-	-	-	-	-	-	-	13240	13250	13270	210

40' Jib length

	220 ft			230 ft			240 ft			250 ft			
	5°	15°	25°	5°	15°	25°	5°	15°	25°	5°	15°	25°	
ft	lb	lb	lb	lb	lb	lb	lb	lb	lb	lb	lb	lb	ft
46	32000*	-	-	-	-	-	-	-	-	-	-	-	46
47	32000*	-	-	32000*	-	-	-	-	-	-	-	-	47
48	32000*	-	-	32000*	-	-	32000*	-	-	-	-	-	48
49	32000*	-	-	32000*	-	-	32000*	-	-	-	-	-	49
50	32000*	-	-	32000*	-	-	32000*	-	-	32000*	-	-	50
60	32000*	32000*	32000*	32000*	32000*	32000*	32000*	32000*	-	32000*	32000*	-	60
70	32000*	32000*	31200*	32000*	32000*	31510*	32000*	32000*	31860*	32000*	32000*	32000*	70
80	32000*	32000*	29250*	32000*	32000*	29580*	32000*	32000*	29860*	32000*	32000*	30200*	80
90	32000*	32000*	27540*	32000*	32000*	27920*	32000*	32000*	28210*	32000*	32000*	28580*	90
100	32000*	32000*	26060*	32000*	32000*	26370*	32000*	32000*	26740*	32000*	32000*	27100*	100
110	32000*	32000*	24710*	32000*	32000*	25170*	32000*	32000*	25450*	32000*	32000*	25790*	110
120	32000*	31910*	23620*	32000*	32000*	23970*	32000*	32000*	24290*	32000*	32000*	24650*	120
130	31590	30100*	22600*	31240	30760*	22910*	30660	30660	23320*	30060	30060	23580*	130
140	27920	27930	21690*	27570	27570	21990*	26980	26990	22330*	26380	26380	22640*	140
150	24780	24780	20830*	24420	24430	21220*	23840	23840	21530*	23230	23240	21800*	150
160	22050	22060	20150*	21700	21710	20410*	21120	21120	20800*	20510	20520	20530	160
170	19680	19680	19470*	19330	19330	19350	18740	18750	18760	18130	18140	18150	170
180	17600	17600	17620	17250	17250	17260	16660	16660	16670	16040	16040	16050	180
190	15740	15750	15760	15400	15400	15420	14790	14800	14810	14180	14190	14200	190
200	14090	14100	14110	13740	13750	13760	13150	13150	13170	12530	12540	12550	200
210	12620	12620	12640	12260	12270	12290	11660	11670	11690	11050	11050	11070	210
220	11290	11300	11310	10940	10950	10960	10340	10340	10360	9720	9720	9740	220
230	-	-	-	9730	9740	9760	9130	9140	9160	8510	8520	8530	230
240	-	-	-	-	-	-	8040	8050	8070	7410	7420	7430	240
250	-	-	-	-	-	-	-	-	-	6420	6430	6440	250

Asterisk (*) areas on this chart indicate ratings that are limited by strength of material or factors other than stability (tipping)

LOAD CHART

HC 285

With 92HI Offset Tip Boom + 16HL Fixed Jib

180,000 lb + 56,000 lb CB | **360°** | **ANSI B 30.5**

40' Jib length

	260 ft			270 ft			
	5°	15°	25°	5°	15°	25°	
ft	lb	lb	lb	lb	lb	lb	ft
51	32000*	-	-	-	-	-	51
52	32000*	-	-	-	-	-	52
53	32000*	-	-	32000*	-	-	53
54	32000*	-	-	32000*	-	-	54
60	32000*	32000*	-	32000*	32000*	-	60
70	32000*	32000*	32000*	32000*	32000*	32000*	70
80	32000*	32000*	30500*	32000*	32000*	30750*	80
90	32000*	32000*	28900*	32000*	32000*	29190*	90
100	32000*	32000*	27430*	32000*	32000*	27700*	100
110	32000*	32000*	26180*	32000*	32000*	26490*	110
120	32000*	32000*	24990*	32000*	32000*	25340*	120
130	29460	29470	23970*	28860	28870	24270*	130
140	25790	25790	22980*	25180	25190	23340*	140
150	22640	22650	22110*	22040	22040	22050	150
160	19920	19920	19930	19310	19320	19330	160
170	17540	17540	17550	16930	16940	16950	170
180	15440	15440	15460	14830	14840	14850	180
190	13580	13590	13600	12970	12980	12990	190
200	11930	11940	11950	11320	11330	11340	200
210	10440	10450	10460	9830	9840	9850	210
220	9110	9110	9130	8490	8500	8510	220
230	7900	7900	7920	7280	7290	7300	230
240	6790	6800	6820	6180	6190	6200	240
250	5790	5800	5820	5180	5180	5200	250
260	4890	4900	4920	4260	4270	4280	260

Asterisk (*) areas on this chart indicate ratings that are limited by strength of material or factors other than stability (tipping)

LOAD CHART

HC 285

With 92HI Offset Tip Boom + 16HL Fixed Jib

180,000 lb + 56,000 lb CB | **360°** | **ANSI B 30.5**

50' Jib length

	130 ft			140 ft			150 ft			160 ft			
	5°	15°	25°	5°	15°	25°	5°	15°	25°	5°	15°	25°	
ft	lb	lb	lb	lb	lb	lb	lb	lb	lb	lb	lb	lb	ft
35	32000*	-	-	-	-	-	-	-	-	-	-	-	35
37	32000*	-	-	32000*	-	-	-	-	-	-	-	-	37
38	32000*	-	-	32000*	-	-	32000*	-	-	-	-	-	38
40	32000*	-	-	32000*	-	-	32000*	-	-	32000*	-	-	40
45	32000*	-	-	32000*	-	-	32000*	-	-	32000*	-	-	45
47	31860*	-	-	32000*	-	-	32000*	-	-	32000*	-	-	47
48	31720*	-	-	31910*	-	-	32000*	-	-	32000*	-	-	48
49	31600*	-	-	31770*	-	-	31920*	-	-	32000*	-	-	49
50	31480*	29020*	-	31700*	29070*	-	31790*	29160*	-	32000*	29180*	-	50
51	31340*	28850*	-	31590*	29010*	-	31790*	29090*	-	31860*	29100*	-	51
52	31250*	28770*	-	31410*	28870*	-	31680*	29030*	-	31730*	29100*	-	52
53	31040*	28750*	-	31310*	28840*	-	31570*	28860*	-	31710*	28920*	-	53
54	30970*	28610*	-	31260*	28690*	-	31340*	28820*	-	31600*	28870*	-	54
55	30850*	28480*	-	31050*	28670*	-	31260*	28760*	-	31510*	28770*	-	55
56	30800*	28480*	-	30990*	28550*	-	31190*	28620*	-	31370*	28720*	-	56
60	30340*	28100*	25190*	30560*	28200*	25620*	30690*	28310*	25980*	30920*	28450*	26290*	60
70	29290*	27300*	23020*	29530*	27440*	23430*	29710*	27570*	23810*	29910*	27720*	24230*	70
80	28280*	26580*	21240*	28640*	26720*	21710*	28840*	26920*	22050*	29030*	27100*	22490*	80
90	27410*	25900*	19760*	27730*	26110*	20180*	27990*	26250*	20630*	28240*	26470*	21040*	90
100	26690*	23770*	18510*	26990*	24650*	18930*	27330*	25420*	19380*	27570*	25940*	19740*	100
110	25980*	22020*	17420*	26380*	22760*	17850*	26590*	23570*	18240*	26850*	24320*	18680*	110
120	24550*	20510*	16530*	25740*	21280*	16940*	25980*	22000*	17290*	26250*	22740*	17710*	120
130	22840*	19260*	15730*	23920*	19990*	16140*	24920*	20630*	16500*	25670*	21290*	16900*	130
140	-	-	-	22310*	18860*	15450*	23240*	19440*	15830*	24210*	20130*	16130*	140
150	-	-	-	-	-	-	21780*	18460*	15240*	22760*	19050*	15550*	150
160	-	-	-	-	-	-	-	-	-	21380*	18120*	14990*	160

50' Jib length

	170 ft			180 ft			190 ft			200 ft			
	5°	15°	25°	5°	15°	25°	5°	15°	25°	5°	15°	25°	
ft	lb	lb	lb	lb	lb	lb	lb	lb	lb	lb	lb	lb	ft
41	32000*	-	-	-	-	-	-	-	-	-	-	-	41
42	32000*	-	-	32000*	-	-	-	-	-	-	-	-	42
44	32000*	-	-	32000*	-	-	32000*	-	-	-	-	-	44
45	32000*	-	-	32000*	-	-	32000*	-	-	32000*	-	-	45
50	32000*	29220*	-	32000*	-	-	32000*	-	-	32000*	-	-	50
60	31090*	28530*	26530*	31210*	28590*	26520*	31350*	28640*	26510*	31490*	28620*	-	60
70	30190*	27820*	24600*	30280*	27920*	24900*	30430*	27960*	25180*	30660*	28040*	25410*	70
80	29260*	27210*	22800*	29510*	27320*	23160*	29620*	27420*	23490*	29830*	27430*	23820*	80
90	28530*	26540*	21390*	28640*	26670*	21700*	28860*	26820*	22040*	29100*	26930*	22400*	90
100	27790*	26020*	20090*	28010*	26210*	20470*	28210*	26280*	20830*	28350*	26440*	21150*	100
110	27110*	25050*	19020*	27390*	25670*	19390*	27510*	25790*	19730*	27710*	25880*	19990*	110
120	26530*	23330*	18050*	26780*	24060*	18420*	26950*	24690*	18750*	27210*	25340*	19060*	120
130	25930*	21960*	17230*	26150*	22600*	17570*	26440*	23240*	17880*	26600*	23770*	18160*	130
140	25170*	20700*	16480*	25700*	21360*	16840*	25850*	21910*	17150*	26080*	22440*	17400*	140
150	23640*	19630*	15830*	24510*	20200*	16150*	25420*	20770*	16480*	25610*	21320*	16720*	150
160	22200*	18710*	15290*	23100*	19280*	15600*	23930*	19790*	15850*	23650	20270*	16160*	160
170	21030*	17840*	14820*	21860*	18400*	15080*	21910	18860*	15330*	21280	19360*	15640*	170
180	-	-	-	20440	17640*	14710*	19830	18110*	14900*	19200	18550*	15180*	180
190	-	-	-	-	-	-	17980	17390*	14520*	17350	17360	14760*	190
200	-	-	-	-	-	-	-	-	-	15700	15710	14410*	200

Asterisk (*) areas on this chart indicate ratings that are limited by strength of material or factors other than stability (tipping)

LOAD CHART

HC 285

With 92HI Offset Tip Boom + 16HL Fixed Jib

180,000 lb + 56,000 lb CB | **360°** | **ANSI B 30.5**

50' Jib length

	210 ft			220 ft			230 ft			240 ft			
	5°	15°	25°	5°	15°	25°	5°	15°	25°	5°	15°	25°	
ft	lb	lb	lb	lb	lb	lb	lb	lb	lb	lb	lb	lb	ft
47	32000*	-	-	-	-	-	-	-	-	-	-	-	47
48	32000*	-	-	32000*	-	-	-	-	-	-	-	-	48
49	32000*	-	-	32000*	-	-	32000*	-	-	-	-	-	49
50	32000*	-	-	32000*	-	-	32000*	-	-	-	-	-	50
51	32000*	-	-	32000*	-	-	32000*	-	-	32000*	-	-	51
55	32000*	-	-	32000*	-	-	32000*	-	-	32000*	-	-	55
56	31930*	-	-	32000*	-	-	32000*	-	-	32000*	-	-	56
60	31550*	28750*	-	31640*	28710*	-	31710*	28700*	-	31690*	28750*	-	60
70	30730*	28120*	25720*	30800*	28120*	26000*	30870*	28100*	26020*	30980*	28110*	26000*	70
80	29900*	27540*	24030*	30060*	27550*	24320*	30130*	27610*	24560*	30280*	27680*	24810*	80
90	29190*	26960*	22630*	29420*	27060*	22940*	29410*	27130*	23200*	29600*	27200*	23470*	90
100	28580*	26460*	21400*	28670*	26570*	21730*	28840*	26650*	21940*	28930*	26670*	22230*	100
110	27870*	26060*	20330*	28130*	26110*	20630*	28230*	26160*	20890*	28320*	26280*	21130*	110
120	27330*	25580*	19350*	27570*	25670*	19610*	27630*	25730*	19930*	27770*	25890*	20210*	120
130	26790*	24440*	18440*	26930*	25030*	18790*	27170*	25410*	19040*	27240*	25460*	19300*	130
140	26340*	23090*	17750*	26490*	23570*	17990*	26570*	24120*	18270*	26730*	24620*	18490*	140
150	25760	21870*	17060*	25140	22440*	17290*	24790	22890*	17580*	24190	23400*	17800*	150
160	23040	20820*	16400*	22420	21290*	16690*	22070	21790*	16940*	21480	21490	17150*	160
170	20670	19910*	15860*	20050	20060	16120*	19690	19700	16370*	19100	19110	16620*	170
180	18580	18590	15410*	17970	17970	15670*	17610	17610	15900*	17010	17010	16090*	180
190	16730	16740	14990*	16110	16120	15200*	15750	15760	15400*	15150	15160	15180	190
200	15080	15090	14590*	14460	14470	14490	14100	14110	14120	13500	13510	13530	200
210	13610	13620	13630	12980	12990	13010	12610	12620	12640	12020	12030	12040	210
220	-	-	-	11650	11660	11680	11290	11300	11310	10690	10690	10710	220
230	-	-	-	-	-	-	10080	10090	10110	9480	9490	9510	230
240	-	-	-	-	-	-	-	-	-	8390	8400	8420	240

Asterisk (*) areas on this chart indicate ratings that are limited by strength of material or factors other than stability (tipping)

LOAD CHART

HC 285

With 92HI Offset Tip Boom + 16HL Fixed Jib

180,000 lb + 56,000 lb CB | **360°** | **ANSI B 30.5**

50’ Jib length

	250 ft			260 ft			270 ft			
	5°	15°	25°	5°	15°	25°	5°	15°	25°	
ft	lb	lb	lb	lb	lb	lb	lb	lb	lb	ft
52	32000*	-	-	-	-	-	-	-	-	52
53	32000*	-	-	32000*	-	-	-	-	-	53
54	32000*	-	-	32000*	-	-	-	-	-	54
55	32000*	-	-	32000*	-	-	32000*	-	-	55
56	32000*	-	-	32000*	-	-	32000*	-	-	56
60	31770*	28690*	-	31810*	-	-	31880*	-	-	60
70	31130*	28150*	26050*	31120*	28240*	26030*	31090*	28170*	-	70
80	30390*	27730*	25030*	30360*	27650*	25240*	30430*	27670*	25470*	80
90	29720*	27170*	23720*	29800*	27220*	23940*	29850*	27220*	24170*	90
100	29050*	26740*	22500*	29150*	26770*	22700*	29200*	26840*	22910*	100
110	28470*	26350*	21440*	28580*	26420*	21630*	28610*	26440*	21880*	110
120	27970*	25890*	20420*	27980*	25980*	20660*	28090*	26030*	20940*	120
130	27430*	25530*	19530*	27520*	25610*	19830*	27570*	25680*	20060*	130
140	26740	25170*	18770*	26140	25280*	19030*	25550	25290*	19220*	140
150	23590	23600	18090*	23000	23000	18320*	22400	22400	18560*	150
160	20870	20870	17410*	20270	20280	17690*	19670	19680	17900*	160
170	18500	18500	16840*	17890	17900	17040*	17290	17290	17300*	170
180	16400	16410	16340*	15800	15810	15820	15200	15200	15220	180
190	14540	14550	14570	13930	13940	13960	13340	13340	13360	190
200	12890	12900	12910	12280	12290	12300	11670	11680	11690	200
210	11400	11410	11430	10800	10810	10820	10190	10200	10210	210
220	10070	10080	10090	9450	9460	9480	8850	8860	8870	220
230	8860	8870	8880	8250	8260	8270	7630	7640	7660	230
240	7760	7770	7790	7140	7150	7170	6530	6540	6560	240
250	6760	6770	6790	6150	6160	6170	5520	5530	5550	250
260	-	-	-	5230	5240	5260	4610	4620	4640	260
270	-	-	-	-	-	-	3770	3780	3810	270

Asterisk (*) areas on this chart indicate ratings that are limited by strength of material or factors other than stability (tipping)

LOAD CHART

HC 285

With 92HI Offset Tip Boom + 16HL Fixed Jib

180,000 lb + 56,000 lb CB | **360°** | **ANSI B 30.5**

60' Jib length

	150 ft			160 ft			170 ft			180 ft			
	5°	15°	25°	5°	15°	25°	5°	15°	25°	5°	15°	25°	
ft	lb	lb	lb	lb	lb	lb	lb	lb	lb	lb	lb	lb	ft
40	30360*	-	-	-	-	-	-	-	-	-	-	-	40
41	30210*	-	-	-	-	-	-	-	-	-	-	-	41
42	30070*	-	-	30170*	-	-	-	-	-	-	-	-	42
43	29960*	-	-	30010*	-	-	30080*	-	-	-	-	-	43
44	29840*	-	-	29970*	-	-	29980*	-	-	-	-	-	44
45	29720*	-	-	29870*	-	-	29880*	-	-	29950*	-	-	45
50	29110*	26370*	-	29220*	-	-	29330*	-	-	29400*	-	-	50
51	29040*	26230*	-	29090*	-	-	29290*	-	-	29370*	-	-	51
52	28930*	26180*	-	28980*	-	-	29160*	-	-	29170*	-	-	52
53	28710*	26030*	-	28870*	-	-	29040*	-	-	29170*	-	-	53
54	28650*	26000*	-	28760*	-	-	28890*	-	-	29050*	-	-	54
55	28570*	25870*	-	28670*	-	-	28790*	-	-	28940*	-	-	55
60	27960*	25510*	22750*	28220*	25580*	-	28360*	25670*	-	28370*	25740*	-	60
70	27010*	24720*	20920*	27140*	24870*	21130*	27310*	24950*	21390*	27540*	24970*	21590*	70
80	26080*	24080*	19340*	26290*	24170*	19600*	26450*	24330*	19920*	26620*	24400*	20150*	80
90	25180*	23450*	17980*	25490*	23580*	18340*	25690*	23660*	18630*	25840*	23780*	18900*	90
100	24420*	22180*	16900*	24690*	22810*	17170*	24980*	23150*	17510*	25130*	23250*	17750*	100
110	23790*	20510*	15920*	24050*	21160*	16190*	24270*	21770*	16520*	24450*	22300*	16750*	110
120	23090*	19170*	15090*	23350*	19750*	15360*	23630*	20280*	15630*	23860*	20860*	15900*	120
130	21880*	17990*	14310*	22710*	18490*	14630*	23060*	19000*	14930*	23250*	19550*	15150*	130
140	20320*	16890*	13690*	21150*	17400*	13980*	21960*	17920*	14220*	22690*	18400*	14510*	140
150	19040*	15990*	13170*	19790*	16530*	13410*	20580*	16990*	13700*	21330*	17480*	13920*	150
160	-	-	-	18680*	15710*	12920*	19370*	16120*	13170*	20070*	16630*	13420*	160
170	-	-	-	-	-	-	18280*	15400*	12760*	18970*	15820*	12940*	170
180	-	-	-	-	-	-	-	-	-	17990*	15180*	12550*	180

60' Jib length

	190 ft			200 ft			210 ft			220 ft			
	5°	15°	25°	5°	15°	25°	5°	15°	25°	5°	15°	25°	
ft	lb	lb	lb	lb	lb	lb	lb	lb	lb	lb	lb	lb	ft
46	29880*	-	-	-	-	-	-	-	-	-	-	-	46
47	29740*	-	-	29960*	-	-	-	-	-	-	-	-	47
48	29660*	-	-	29740*	-	-	-	-	-	-	-	-	48
49	29660*	-	-	29690*	-	-	29760*	-	-	-	-	-	49
50	29480*	-	-	29660*	-	-	29680*	-	-	29720*	-	-	50
56	28900*	-	-	29040*	-	-	29080	-	-	29180	-	-	56
57	28800*	-	-	28930*	-	-	28970	-	-	29060	-	-	57
58	28710*	-	-	28820*	-	-	28970	-	-	28930	-	-	58
59	28640*	-	-	28720*	-	-	28880	-	-	28920	-	-	59
60	28560*	25750*	-	28640*	25770*	-	28780*	25860*	-	28820*	25860*	-	60
70	27630*	25080*	21850*	27830*	25170*	22020*	27840*	25150*	22250*	28040*	25170*	22390*	70
80	26840*	24450*	20350*	26990*	24510*	20600*	27060*	24640*	20840*	27210*	24620*	21030*	80
90	26060*	23850*	19130*	26150*	23980*	19330*	26340*	24080*	19570*	26510*	24070*	19780*	90
100	25300*	23340*	18040*	25540*	23500*	18280*	25640*	23520*	18460*	25820*	23620*	18720*	100
110	24620*	22780*	17020*	24900*	22970*	17310*	25040*	23030*	17520*	25160*	23160*	17730*	110
120	24050*	21340*	16170*	24290*	21880*	16450*	24380*	22300*	16690*	24550*	22730*	16890*	120
130	23510*	20040*	15450*	23720*	20560*	15690*	23830*	20980*	15900*	24060*	21480*	16100*	130
140	22940*	18940*	14750*	23210*	19370*	15000*	23340*	19870*	15220*	23550*	20300*	15420*	140
150	22070*	17920*	14170*	22700*	18400*	14420*	22860*	18770*	14630*	23030*	19270*	14870*	150
160	20730*	17040*	13660*	21450*	17460*	13870*	22120*	17900*	14070*	22550*	18320*	14300*	160
170	19640*	16240*	13200*	20290*	16640*	13370*	20910*	17040*	13570*	20400	17440*	13770*	170
180	18620*	15560*	12780*	19170*	15930*	12990*	18930	16360*	13140*	18310	16690*	13350*	180
190	17700*	14930*	12400*	17690	15330*	12610*	17080	15640*	12810*	16450	16060*	12950*	190
200	-	-	-	16040	14750*	12290*	15420	15060*	12440*	14810	14820	12630*	200
210	-	-	-	-	-	-	13940	13950	12180*	13320	13330	12330*	210
220	-	-	-	-	-	-	-	-	-	11990	12000	12020	220

Asterisk (*) areas on this chart indicate ratings that are limited by strength of material or factors other than stability (tipping)

TEREX®

LOAD CHART

HC 285

With 92HI Offset Tip Boom + 16HL Fixed Jib

180,000 lb + 56,000 lb CB | **360°** | **ANSI B 30.5**

60' Jib length

	230 ft			240 ft			250 ft			260 ft			
	5°	15°	25°	5°	15°	25°	5°	15°	25°	5°	15°	25°	
ft	lb	lb	lb	lb	lb	lb	lb	lb	lb	lb	lb	lb	ft
52	29460*	-	-	-	-	-	-	-	-	-	-	-	52
53	29390*	-	-	29450*	-	-	-	-	-	-	-	-	53
54	29340*	-	-	29390*	-	-	29430*	-	-	-	-	-	54
55	29300*	-	-	29210*	-	-	29300*	-	-	-	-	-	55
56	29120*	-	-	29120*	-	-	29250*	-	-	29270*	-	-	56
60	28820*	-	-	28880*	-	-	28950*	-	-	28910*	-	-	60
70	28070*	25220*	-	28110*	25220*	-	28130*	25220*	-	28170*	25200*	-	70
80	27230*	24680*	21240*	27350*	24650*	21410*	27440*	24740*	21550*	27490*	24780*	21710*	80
90	26530*	24130*	20010*	26650*	24190*	20190*	26740*	24200*	20350*	26850*	24230*	20500*	90
100	25850*	23640*	18940*	25990*	23730*	19070*	26140*	23780*	19290*	26240*	23790*	19470*	100
110	25240*	23170*	17980*	25420*	23260*	18140*	25600*	23340*	18360*	25600*	23430*	18530*	110
120	24690*	22780*	17110*	24900*	22890*	17330*	25040*	22900*	17510*	25100*	22990*	17660*	120
130	24150*	21950*	16380*	24280*	22350*	16560*	24430*	22540*	16780*	24530*	22570*	16970*	130
140	23680*	20700*	15700*	23830*	21170*	15870*	23920*	21510*	16070*	24070*	21970*	16220*	140
150	23160*	19690*	15050*	23360*	20040*	15270*	23500*	20490*	15440*	23350	20830*	15630*	150
160	22400	18660*	14480*	21820	19080*	14720*	21210	19460*	14870*	20620	19810*	15040*	160
170	20030	17860*	14010*	19440	18200*	14200*	18830	18550*	14360*	18240	18240	14590*	170
180	17940	17040*	13570*	17350	17360	13750*	16740	16750	13950*	16140	16140	14090*	180
190	16080	16090	13160*	15490	15500	13320*	14880	14890	13500*	14280	14290	13700*	190
200	14430	14440	12780*	13840	13850	12990*	13220	13230	13100*	12620	12630	12650	200
210	12950	12960	12470*	12350	12360	12380	11740	11750	11770	11130	11140	11160	210
220	11620	11630	11650	11020	11030	11050	10400	10410	10430	9790	9800	9820	220
230	10410	10420	10440	9810	9820	9840	9190	9200	9220	8580	8590	8610	230
240	-	-	-	8710	8720	8750	8090	8100	8120	7480	7490	7510	240
250	-	-	-	-	-	-	7090	7100	7120	6470	6480	6500	250
260	-	-	-	-	-	-	-	-	-	5560	5570	5590	260

60' Jib length

	270 ft			
	5°	15°	25°	
ft	lb	lb	lb	ft
57	29130*	-	-	57
58	29070*	-	-	58
59	29020*	-	-	59
60	28970*	-	-	60
70	28150*	25200*	-	70
80	27550*	24670*	21820*	80
90	26910*	24270*	20720*	90
100	26280*	23810*	19620*	100
110	25670*	23450*	18680*	110
120	25210*	23030*	17890*	120
130	24680*	22640*	17150*	130
140	24160*	22250*	16440*	140
150	22740	21200*	15800*	150
160	20020	20020	15240*	160
170	17630	17640	14750*	170
180	15530	15540	14230*	180
190	13670	13680	13700	190
200	12010	12020	12040	200
210	10530	10540	10560	210
220	9190	9200	9210	220
230	7970	7980	8000	230
240	6860	6870	6890	240
250	5850	5860	5880	250
260	4940	4950	4970	260
270	4090	4110	4130	270

Asterisk (*) areas on this chart indicate ratings that are limited by strength of material or factors other than stability (tipping)

LOAD CHART

HC 285

With 92HI Offset Tip Boom + 16HL Fixed Jib

180,000 lb + 56,000 lb CB | **360°** | **ANSI B 30.5**

70' Jib length

	180 ft			190 ft			200 ft			210 ft			
	5°	15°	25°	5°	15°	25°	5°	15°	25°	5°	15°	25°	
ft	lb	lb	lb	lb	lb	lb	lb	lb	lb	lb	lb	lb	ft
47	22290*	-	-	-	-	-	-	-	-	-	-	-	47
48	22260*	-	-	22320*	-	-	-	-	-	-	-	-	48
50	22090*	-	-	22150*	-	-	22190*	-	-	-	-	-	50
51	21980*	-	-	22010*	-	-	22140*	-	-	22200*	-	-	51
58	21380*	-	-	21470*	-	-	21600*	-	-	21580*	-	-	58
60	21240*	18970*	-	21340*	18990*	-	21390*	-	-	21520*	-	-	60
61	21110*	18880*	-	21240*	18970*	-	21340*	-	-	21360*	-	-	61
70	20490*	18400*	16750*	20590*	18490*	-	20680*	18470*	-	20750*	18540*	-	70
80	19720*	17870*	16340*	19850*	17920*	16340*	20040*	17960*	16410*	20130*	18030*	16370*	80
90	19130*	17350*	15870*	19240*	17420*	15940*	19350*	17540*	15930*	19530*	17590*	15990*	90
100	18550*	16910*	15430*	18680*	17000*	15470*	18820*	17070*	15560*	18950*	17130*	15570*	100
110	17940*	16440*	14630*	18070*	16540*	14830*	18280*	16640*	15010*	18360*	16730*	15200*	110
120	17440*	15920*	13840*	17620*	16060*	14090*	17770*	16210*	14300*	17900*	16350*	14440*	120
130	16910*	15520*	13200*	17090*	15590*	13370*	17280*	15730*	13570*	17400*	15900*	13790*	130
140	16440*	15110*	12590*	16680*	15250*	12820*	16860*	15370*	12970*	16970*	15480*	13150*	140
150	15880*	14750*	12070*	16120*	14840*	12260*	16360*	14990*	12450*	16590*	15130*	12600*	150
160	15480*	14420*	11580*	15670*	14510*	11770*	15910*	14650*	11960*	16060*	14770*	12120*	160
170	15070*	13760*	11200*	15280*	14140*	11360*	15480*	14390*	11560*	15630*	14500*	11720*	170
180	14690*	13190*	10840*	14900*	13510*	10990*	15090*	13850*	11170*	15240*	14140*	11330*	180
190	-	-	-	14510*	12980*	10660*	14730*	13270*	10810*	14880*	13570*	10970*	190
200	-	-	-	-	-	-	14390*	12780*	10510*	14610*	13030*	10670*	200
210	-	-	-	-	-	-	-	-	-	14240	12580*	10380*	210

70' Jib length

	220 ft			230 ft			240 ft			250 ft			
	5°	15°	25°	5°	15°	25°	5°	15°	25°	5°	15°	25°	
ft	lb	lb	lb	lb	lb	lb	lb	lb	lb	lb	lb	lb	ft
52	22150*	-	-	-	-	-	-	-	-	-	-	-	52
54	21990*	-	-	21980*	-	-	-	-	-	-	-	-	54
55	21870*	-	-	21950*	-	-	21960*	-	-	-	-	-	55
57	21740*	-	-	21800*	-	-	21770*	-	-	21870*	-	-	57
60	21560*	-	-	21580*	-	-	21600*	-	-	21670*	-	-	60
70	20830*	18510*	-	20860*	18580*	-	20930*	18550*	-	20990*	18580*	-	70
80	20210*	18070*	16430*	20260*	18070*	16390*	20340*	18090*	16380*	20440*	18140*	16390*	80
90	19610*	17620*	16040*	19700*	17630*	16080*	19730*	17690*	16090*	19820*	17740*	16090*	90
100	19070*	17180*	15650*	19120*	17240*	15660*	19230*	17240*	15700*	19280*	17340*	15720*	100
110	18530*	16820*	15300*	18620*	16840*	15330*	18670*	16880*	15320*	18840*	16950*	15420*	110
120	18050*	16410*	14630*	18170*	16470*	14820*	18210*	16520*	14960*	18340*	16600*	15060*	120
130	17580*	15980*	13980*	17650*	16090*	14130*	17790*	16160*	14260*	17870*	16260*	14420*	130
140	17130*	15570*	13330*	17280*	15730*	13530*	17370*	15780*	13690*	17490*	15930*	13820*	140
150	16680*	15210*	12800*	16870*	15330*	12990*	16940*	15410*	13130*	17090*	15510*	13280*	150
160	16310*	14900*	12330*	16460*	15010*	12450*	16570*	15070*	12620*	16710*	15220*	12770*	160
170	15870*	14570*	11880*	16020*	14720*	12050*	16190*	14780*	12200*	16340*	14910*	12340*	170
180	15480*	14320*	11470*	15610*	14410*	11630*	15840*	14510*	11760*	15990*	14620*	11940*	180
190	15110*	13860*	11130*	15250*	14150*	11250*	15450*	14280*	11420*	15180	14380*	11540*	190
200	14770*	13300*	10820*	14720	13620*	10930*	14130	13890*	11090*	13520	13530	11200*	200
210	13620	12840*	10530*	13240	13110*	10670*	12650	12660	10790*	12040	12050	10940*	210
220	12290	12300	10270*	11910	11920	10390*	11310	11320	10500*	10700	10710	10640*	220
230	-	-	-	10700	10710	10170*	10100	10110	10130	9480	9490	9520	230
240	-	-	-	-	-	-	9000	9010	9040	8380	8390	8410	240
250	-	-	-	-	-	-	-	-	-	7370	7380	7410	250

Asterisk (*) areas on this chart indicate ratings that are limited by strength of material or factors other than stability (tipping)

LOAD CHART

HC 285

With 92HI Offset Tip Boom + 16HL Fixed Jib

180,000 lb + 56,000 lb CB | **360°** | **ANSI B 30.5**

70' Jib length

	260 ft			270 ft			
	5°	15°	25°	5°	15°	25°	
ft	lb	lb	lb	lb	lb	lb	ft
58	21780*	-	-	-	-	-	58
60	21650*	-	-	21740*	-	-	60
61	21650*	-	-	21630*	-	-	61
70	21090*	18610*	-	21100*	-	-	70
80	20500*	18120*	16360*	20490*	18140*	-	80
90	19940*	17720*	16040*	19940*	17760*	16060*	90
100	19420*	17340*	15750*	19480*	17340*	15730*	100
110	18920*	16970*	15390*	18960*	16990*	15440*	110
120	18450*	16650*	15130*	18510*	16680*	15120*	120
130	18010*	16270*	14610*	18100*	16330*	14700*	130
140	17580*	15970*	13970*	17700*	16050*	14100*	140
150	17220*	15650*	13410*	17300*	15700*	13570*	150
160	16810*	15280*	12910*	16890*	15390*	13040*	160
170	16490*	14990*	12500*	16590*	15110*	12620*	170
180	16110*	14700*	12080*	15840	14810*	12190*	180
190	14580	14440*	11700*	13970	13980	11850*	190
200	12920	12930	11330*	12320	12330	11480*	200
210	11430	11440	11050*	10820	10830	10850	210
220	10090	10100	10120	9480	9490	9510	220
230	8880	8890	8910	8270	8280	8300	230
240	7770	7780	7810	7160	7170	7190	240
250	6760	6770	6800	6150	6170	6190	250
260	5850	5860	5880	5230	5250	5270	260
270	-	-	-	4390	4400	4430	270

Asterisk (*) areas on this chart indicate ratings that are limited by strength of material or factors other than stability (tipping)

LOAD CHART

HC 285

With 92HI Offset Tip Boom + 16HL Fixed Jib

180,000 lb + 56,000 lb CB | **360°** | **ANSI B 30.5**

80' Jib length

	200 ft			210 ft			220 ft			230 ft			
	5°	15°	25°	5°	15°	25°	5°	15°	25°	5°	15°	25°	
ft	lb	lb	lb	lb	lb	lb	lb	lb	lb	lb	lb	lb	ft
52	17370*	-	-	-	-	-	-	-	-	-	-	-	52
53	17350*	-	-	17330*	-	-	-	-	-	-	-	-	53
55	17150*	-	-	17190*	-	-	17230*	-	-	-	-	-	55
56	17080*	-	-	17110*	-	-	17210*	-	-	17220*	-	-	56
60	16800*	-	-	16860*	-	-	16930*	-	-	16970*	-	-	60
70	16120*	14110*	-	16210*	14140*	-	16270*	14170*	-	16340*	14170*	-	70
80	15490*	13650*	12000*	15560*	13730*	12010*	15660*	13760*	11990*	15710*	13710*	-	80
90	14930*	13130*	11600*	15040*	13200*	11600*	15130*	13300*	11660*	15190*	13340*	11660*	90
100	14400*	12640*	11240*	14520*	12740*	11260*	14630*	12820*	11310*	14660*	12870*	11350*	100
110	13900*	12240*	10960*	14000*	12290*	10960*	14130*	12380*	10980*	14200*	12460*	11010*	110
120	13410*	11830*	10680*	13540*	11910*	10700*	13700*	11960*	10740*	13780*	12070*	10760*	120
130	12870*	11420*	10380*	13030*	11520*	10460*	13170*	11620*	10450*	13320*	11690*	10500*	130
140	12390*	11120*	10180*	12540*	11190*	10190*	12730*	11270*	10220*	12840*	11380*	10290*	140
150	11970*	10810*	9950*	12110*	10900*	9990*	12270*	10970*	10010*	12440*	11070*	10060*	150
160	11560*	10520*	9780*	11710*	10600*	9820*	11860*	10710*	9830*	12020*	10790*	9870*	160
170	11210*	10300*	9600*	11350*	10380*	9660*	11540*	10470*	9670*	11640*	10530*	9700*	170
180	10890*	10060*	9460*	11020*	10170*	9530*	11210*	10210*	9520*	11300*	10320*	9540*	180
190	10590*	9870*	9380*	10770*	9940*	9400*	10900*	10020*	9390*	11040*	10070*	9440*	190
200	10330*	9700*	9220*	10490*	9770*	9300*	10620*	9840*	9310*	10750*	9900*	9310*	200
210	-	-	-	10230*	9620*	9090*	10350*	9680*	9200*	10480*	9730*	9240*	210
220	-	-	-	-	-	-	10130*	9530*	8970*	10280*	9580*	9090*	220
230	-	-	-	-	-	-	-	-	-	10040*	9460*	8870*	230

80' Jib length

	240 ft			250 ft			260 ft			270 ft			
	5°	15°	25°	5°	15°	25°	5°	15°	25°	5°	15°	25°	
ft	lb	lb	lb	lb	lb	lb	lb	lb	lb	lb	lb	lb	ft
57	17150*	-	-	-	-	-	-	-	-	-	-	-	57
59	17060*	-	-	17070*	-	-	-	-	-	-	-	-	59
60	16980*	-	-	16990*	-	-	17020*	-	-	-	-	-	60
62	16880*	-	-	16860*	-	-	16930*	-	-	16920*	-	-	62
70	16330*	-	-	16400*	-	-	16460*	-	-	16450*	-	-	70
80	15790*	13770*	-	15830*	13740*	-	15930*	13760*	-	15920*	13800*	-	80
90	15260*	13380*	11690*	15310*	13420*	11660*	15400*	13390*	11680*	15400*	13400*	11690*	90
100	14740*	12960*	11330*	14820*	12990*	11350*	14870*	13010*	11360*	14960*	13080*	11390*	100
110	14320*	12540*	11060*	14390*	12590*	11040*	14450*	12620*	11060*	14520*	12690*	11110*	110
120	13890*	12120*	10770*	13930*	12160*	10810*	14030*	12270*	10830*	14130*	12300*	10840*	120
130	13440*	11760*	10540*	13570*	11800*	10560*	13650*	11880*	10560*	13700*	11960*	10590*	130
140	13000*	11430*	10290*	13160*	11520*	10320*	13280*	11570*	10340*	13350*	11620*	10390*	140
150	12560*	11120*	10100*	12700*	11220*	10110*	12860*	11250*	10160*	12970*	11330*	10180*	150
160	12180*	10830*	9890*	12300*	10920*	9930*	12440*	10980*	9970*	12530*	11040*	9970*	160
170	11780*	10580*	9750*	11950*	10650*	9750*	12070*	10740*	9800*	12170*	10790*	9790*	170
180	11440*	10350*	9560*	11580*	10410*	9620*	11690*	10490*	9610*	11830*	10580*	9630*	180
190	11160*	10150*	9460*	11250*	10200*	9460*	11380*	10270*	9480*	11520*	10320*	9500*	190
200	10870*	9960*	9330*	11000*	10000*	9370*	11120*	10070*	9380*	11190*	10160*	9380*	200
210	10590*	9810*	9250*	10720*	9870*	9240*	10830*	9930*	9280*	10940*	9960*	9270*	210
220	10390*	9650*	9150*	10460*	9710*	9160*	10380	9760*	9150*	9770	9780	9180*	220
230	10150*	9500*	8950*	9760	9560*	9060*	9160	9170	9080*	8550	8570	8590	230
240	9270	9280	8780*	8660	8680	8700	8050	8060	8080	7440	7460	7480	240
250	-	-	-	7650	7660	7690	7040	7060	7080	6430	6440	6460	250
260	-	-	-	-	-	-	6120	6140	6160	5520	5530	5550	260
270	-	-	-	-	-	-	-	-	-	4670	4680	4710	270

Asterisk (*) areas on this chart indicate ratings that are limited by strength of material or factors other than stability (tipping)

LOAD CHART

HC 285

With 92HI Offset Tip Boom + 16HL Fixed Jib

180,000 lb + 56,000 lb CB | **360°** | **ANSI B 30.5**

90' Jib length

	230 ft			240 ft			250 ft			260 ft			
	5°	15°	25°	5°	15°	25°	5°	15°	25°	5°	15°	25°	
ft	lb	lb	lb	lb	lb	lb	lb	lb	lb	lb	lb	lb	ft
58	13740*	-	-	-	-	-	-	-	-	-	-	-	58
59	13670*	-	-	-	-	-	-	-	-	-	-	-	59
60	13610*	-	-	13650*	-	-	-	-	-	-	-	-	60
61	13550*	-	-	13580*	-	-	13640*	-	-	-	-	-	61
62	13510*	-	-	13570*	-	-	13580*	-	-	13580*	-	-	62
70	13100*	-	-	13130*	-	-	13140*	-	-	13200*	-	-	70
80	12550*	10340*	-	12570*	10400*	-	12620*	10410*	-	12680*	10410*	-	80
90	11970*	9930*	8530*	12040*	9940*	8500*	12110*	9990*	8520*	12190*	10000*	-	90
100	11380*	9550*	8250*	11480*	9580*	8220*	11540*	9600*	8230*	11650*	9620*	8230*	100
110	10830*	9180*	7980*	10950*	9240*	8010*	11040*	9280*	7990*	11150*	9290*	8000*	110
120	10360*	8860*	7760*	10490*	8890*	7770*	10590*	8930*	7760*	10660*	8960*	7780*	120
130	9930*	8550*	7570*	10040*	8590*	7580*	10160*	8620*	7580*	10220*	8670*	7580*	130
140	9560*	8280*	7350*	9650*	8310*	7380*	9760*	8360*	7370*	9840*	8390*	7370*	140
150	9200*	8020*	7200*	9270*	8070*	7220*	9360*	8130*	7230*	9470*	8170*	7210*	150
160	8840*	7820*	7030*	8940*	7860*	7040*	9060*	7910*	7070*	9150*	7940*	7080*	160
170	8550*	7610*	6890*	8650*	7640*	6920*	8750*	7680*	6900*	8830*	7730*	6930*	170
180	8260*	7380*	6750*	8390*	7440*	6780*	8480*	7510*	6780*	8540*	7550*	6800*	180
190	8030*	7210*	6670*	8110*	7260*	6650*	8190*	7320*	6670*	8290*	7350*	6670*	190
200	7790*	7060*	6560*	7890*	7100*	6570*	7970*	7150*	6580*	8050*	7210*	6570*	200
210	7600*	6950*	6490*	7660*	6990*	6460*	7770*	6990*	6470*	7840*	7050*	6490*	210
220	7390*	6820*	6400*	7480*	6850*	6400*	7540*	6890*	6400*	7620*	6900*	6410*	220
230	7230*	6700*	6350*	7310*	6730*	6340*	7370*	6760*	6340*	7440*	6790*	6340*	230
240	-	-	-	7160*	6640*	6320*	7210*	6670*	6310*	7280*	6700*	6280*	240
250	-	-	-	-	-	-	7070*	6590*	6260*	7120*	6590*	6260*	250
260	-	-	-	-	-	-	-	-	-	6370	6380	6210*	260

90' Jib length

	270 ft			
	5°	15°	25°	
ft	lb	lb	lb	ft
64	13510*	-	-	64
65	13450*	-	-	65
70	13200*	-	-	70
80	12690*	10430*	-	80
90	12250*	10010*	-	90
100	11730*	9650*	8230*	100
110	11240*	9330*	7990*	110
120	10760*	9000*	7800*	120
130	10340*	8730*	7600*	130
140	9920*	8440*	7380*	140
150	9590*	8190*	7220*	150
160	9250*	7980*	7070*	160
170	8920*	7760*	6940*	170
180	8660*	7570*	6800*	180
190	8390*	7390*	6680*	190
200	8150*	7230*	6570*	200
210	7930*	7060*	6480*	210
220	7720*	6940*	6390*	220
230	7500*	6830*	6320*	230
240	7330*	6700*	6280*	240
250	6680	6610*	6220*	250
260	5760	5770	5800	260
270	4910	4920	4950	270

Asterisk (*) areas on this chart indicate ratings that are limited by strength of material or factors other than stability (tipping)

LOAD CHART

HC 285

With 92HI Offset Tip Boom + 16HL Fixed Jib

180,000 lb + 56,000 lb CB | **360°** | **ANSI B 30.5**

100' Jib length

	250 ft			260 ft			
	5°	15°	25°	5°	15°	25°	
ft	lb	lb	lb	lb	lb	lb	ft
63	10260*	-	-	-	-	-	63
64	10220*	-	-	-	-	-	64
65	10140*	-	-	10200*	-	-	65
66	10100*	-	-	10120*	-	-	66
70	9840*	-	-	9870*	-	-	70
80	9300*	7350*	-	9330*	-	-	80
90	8760*	7000*	-	8840*	7010*	-	90
100	8290*	6720*	5600*	8380*	6720*	5580*	100
110	7890*	6450*	5410*	7960*	6430*	5390*	110
120	7510*	6170*	5230*	7550*	6190*	5220*	120
130	7160*	5950*	5060*	7220*	5950*	5060*	130
140	6860*	5720*	4920*	6910*	5750*	4920*	140
150	6570*	5510*	4800*	6600*	5560*	4790*	150
160	6280*	5330*	4670*	6340*	5360*	4650*	160
170	6030*	5170*	4560*	6110*	5190*	4550*	170
180	5830*	5010*	4440*	5870*	5040*	4450*	180
190	5600*	4890*	4350*	5660*	4910*	4360*	190
200	5420*	4750*	4280*	5470*	4790*	4270*	200
210	5250*	4650*	4210*	5320*	4660*	4200*	210
220	5100*	4540*	4150*	5160*	4560*	4140*	220
230	4960*	4460*	4100*	5020*	4480*	4080*	230
240	4830*	4380*	4060*	4880*	4380*	4030*	240
250	4710*	4320*	4040*	4760*	4310*	4010*	250
260	-	-	-	4650*	4240*	3990*	260

Asterisk (*) areas on this chart indicate ratings that are limited by strength of material or factors other than stability (tipping)

LOAD CHART

HC 285

With 92HI Offset Tip Boom + 16HL Fixed Jib

154,000 lb + 56,000 lb CB | **360°** | **ANSI B 30.5**

40' Jib length

	100 ft			110 ft			120 ft			130 ft			
	5°	15°	25°	5°	15°	25°	5°	15°	25°	5°	15°	25°	
ft	lb	lb	lb	lb	lb	lb	lb	lb	lb	lb	lb	lb	ft
29	32000*	-	-	-	-	-	-	-	-	-	-	-	29
30	32000*	-	-	32000*	-	-	-	-	-	-	-	-	30
31	32000*	-	-	32000*	-	-	-	-	-	-	-	-	31
32	32000*	-	-	32000*	-	-	32000*	-	-	-	-	-	32
33	32000*	-	-	32000*	-	-	32000*	-	-	32000*	-	-	33
40	32000*	32000*	-	32000*	32000*	-	32000*	32000*	-	32000*	32000*	-	40
50	32000*	32000*	30760*	32000*	32000*	31420*	32000*	32000*	32000*	32000*	32000*	32000*	50
60	32000*	32000*	27580*	32000*	32000*	28230*	32000*	32000*	28880*	32000*	32000*	29500*	60
70	32000*	32000*	24990*	32000*	32000*	25740*	32000*	32000*	26360*	32000*	32000*	27050*	70
80	32000*	29550*	22930*	32000*	30880*	23680*	32000*	32000*	24330*	32000*	32000*	24930*	80
90	31840*	26770*	21280*	32000*	28090*	21920*	32000*	29320*	22610*	32000*	30530*	23230*	90
100	28730*	24590*	19930*	30530*	25710*	20530*	32000*	26880*	21220*	32000*	27980*	21790*	100
110	-	-	-	27830*	23820*	19440*	29470*	24860*	19980*	30980*	25970*	20540*	110
120	-	-	-	-	-	-	27130*	23290*	19000*	28510*	24160*	19530*	120
130	-	-	-	-	-	-	-	-	-	26470*	22730*	18710*	130

40' Jib length

	140 ft			150 ft			160 ft			170 ft			
	5°	15°	25°	5°	15°	25°	5°	15°	25°	5°	15°	25°	
ft	lb	lb	lb	lb	lb	lb	lb	lb	lb	lb	lb	lb	ft
35	32000*	-	-	-	-	-	-	-	-	-	-	-	35
36	32000*	-	-	32000*	-	-	-	-	-	-	-	-	36
37	32000*	-	-	32000*	-	-	32000*	-	-	-	-	-	37
39	32000*	-	-	32000*	-	-	32000*	-	-	32000*	-	-	39
40	32000*	-	-	32000*	-	-	32000*	-	-	32000*	-	-	40
50	32000*	32000*	32000*	32000*	32000*	32000*	32000*	32000*	32000*	32000*	32000*	-	50
60	32000*	32000*	30130*	32000*	32000*	30600*	32000*	32000*	31160*	32000*	32000*	31560*	60
70	32000*	32000*	27600*	32000*	32000*	28110*	32000*	32000*	28660*	32000*	32000*	29150*	70
80	32000*	32000*	25600*	32000*	32000*	26080*	32000*	32000*	26680*	32000*	32000*	27080*	80
90	32000*	31670*	23800*	32000*	32000*	24370*	32000*	32000*	24930*	32000*	32000*	25360*	90
100	32000*	29090*	22380*	32000*	30070*	22870*	32000*	31080*	23420*	32000*	32000*	23890*	100
110	32000*	26930*	21110*	32000*	27880*	21620*	32000*	28890*	22160*	32000*	29850*	22610*	110
120	30010*	25160*	20090*	31350*	26120*	20540*	32000*	26960*	21040*	32000*	27860*	21560*	120
130	27870*	23620*	19220*	29130*	24500*	19630*	30370*	25360*	20100*	29920	26170*	20590*	130
140	25970*	22310*	18430*	27190*	23110*	18900*	27230	23960*	19340*	26600	24710*	19700*	140
150	-	-	-	25010	21960*	18190*	24380	22740*	18570*	23750	23440*	19020*	150
160	-	-	-	-	-	-	21920	21660*	18060*	21290	21300	18370*	160
170	-	-	-	-	-	-	-	-	-	19150	19150	17900*	170

Asterisk (*) areas on this chart indicate ratings that are limited by strength of material or factors other than stability (tipping)

LOAD CHART

HC 285

With 92HI Offset Tip Boom + 16HL Fixed Jib

154,000 lb + 56,000 lb CB | **360°** | **ANSI B 30.5**

40' Jib length

	180 ft			190 ft			200 ft			210 ft			
	5°	15°	25°	5°	15°	25°	5°	15°	25°	5°	15°	25°	
ft	lb	lb	lb	lb	lb	lb	lb	lb	lb	lb	lb	lb	ft
40	32000*	-	-	-	-	-	-	-	-	-	-	-	40
41	32000*	-	-	32000*	-	-	-	-	-	-	-	-	41
42	32000*	-	-	32000*	-	-	-	-	-	-	-	-	42
43	32000*	-	-	32000*	-	-	32000*	-	-	-	-	-	43
44	32000*	-	-	32000*	-	-	32000*	-	-	32000*	-	-	44
50	32000*	32000*	-	32000*	32000*	-	32000*	32000*	-	32000*	-	-	50
60	32000*	32000*	31910*	32000*	32000*	32000*	32000*	32000*	32000*	32000*	32000*	32000*	60
70	32000*	32000*	29630*	32000*	32000*	30020*	32000*	32000*	30400*	32000*	32000*	30830*	70
80	32000*	32000*	27610*	32000*	32000*	28070*	32000*	32000*	28490*	32000*	32000*	28880*	80
90	32000*	32000*	25840*	32000*	32000*	26290*	32000*	32000*	26740*	32000*	32000*	27140*	90
100	32000*	32000*	24420*	32000*	32000*	24860*	32000*	32000*	25290*	32000*	32000*	25660*	100
110	32000*	30670*	23100*	32000*	31570*	23590*	32000*	32000*	23950*	32000*	32000*	24380*	110
120	32000*	28680*	22020*	32000*	29540*	22410*	32000*	30350*	22790*	31740	31130*	23170*	120
130	29620	26990*	20950*	29030	27840*	21410*	28410	28420	21850*	27810	27810	22210*	130
140	26300	25440*	20140*	25700	25700	20500*	25080	25090	20890*	24470	24480	21250*	140
150	23450	23460	19390*	22850	22860	19770*	22230	22240	20120*	21620	21620	20460*	150
160	21000	21000	18770*	20390	20400	19060*	19770	19780	19400*	19150	19160	19170	160
170	18840	18850	18160*	18250	18250	18270	17610	17620	17630	17000	17010	17020	170
180	16960	16970	16980	16360	16360	16380	15730	15730	15750	15110	15120	15130	180
190	-	-	-	14680	14690	14710	14050	14060	14070	13440	13450	13460	190
200	-	-	-	-	-	-	12570	12580	12590	11940	11950	11970	200
210	-	-	-	-	-	-	-	-	-	10610	10620	10640	210

40' Jib length

	220 ft			230 ft			240 ft			250 ft			
	5°	15°	25°	5°	15°	25°	5°	15°	25°	5°	15°	25°	
ft	lb	lb	lb	lb	lb	lb	lb	lb	lb	lb	lb	lb	ft
46	32000*	-	-	-	-	-	-	-	-	-	-	-	46
47	32000*	-	-	32000*	-	-	-	-	-	-	-	-	47
48	32000*	-	-	32000*	-	-	32000*	-	-	-	-	-	48
49	32000*	-	-	32000*	-	-	32000*	-	-	-	-	-	49
50	32000*	-	-	32000*	-	-	32000*	-	-	32000*	-	-	50
60	32000*	32000*	32000*	32000*	32000*	32000*	32000*	32000*	-	32000*	32000*	-	60
70	32000*	32000*	31200*	32000*	32000*	31510*	32000*	32000*	31860*	32000*	32000*	32000*	70
80	32000*	32000*	29250*	32000*	32000*	29580*	32000*	32000*	29860*	32000*	32000*	30200*	80
90	32000*	32000*	27540*	32000*	32000*	27920*	32000*	32000*	28210*	32000*	32000*	28580*	90
100	32000*	32000*	26060*	32000*	32000*	26370*	32000*	32000*	26740*	32000*	32000*	27100*	100
110	32000*	32000*	24710*	32000*	32000*	25170*	32000*	32000*	25450*	32000*	32000*	25790*	110
120	31140	31140	23620*	30790	30790	23970*	30210	30210	24290*	29600	29610	24650*	120
130	27190	27200	22600*	26840	26850	22910*	26260	26260	23320*	25660	25660	23580*	130
140	23860	23870	21690*	23510	23510	21990*	22920	22930	22330*	22320	22320	22340	140
150	21010	21010	20830*	20650	20660	20670	20070	20070	20090	19460	19470	19480	150
160	18540	18550	18560	18190	18200	18210	17600	17600	17620	16990	17000	17010	160
170	16390	16390	16410	16040	16040	16060	15450	15460	15470	14830	14840	14850	170
180	14490	14490	14510	14150	14150	14160	13550	13550	13560	12940	12940	12950	180
190	12810	12820	12830	12470	12470	12490	11860	11870	11880	11250	11260	11270	190
200	11320	11330	11340	10960	10970	10980	10370	10370	10390	9750	9760	9770	200
210	9990	9990	10010	9630	9640	9660	9030	9040	9060	8410	8410	8430	210
220	8780	8790	8800	8420	8430	8440	7830	7830	7850	7210	7210	7230	220
230	-	-	-	7340	7350	7370	6730	6740	6760	6110	6120	6130	230
240	-	-	-	-	-	-	5750	5760	5780	5120	5130	5140	240
250	-	-	-	-	-	-	-	-	-	4230	4240	4250	250

Asterisk (*) areas on this chart indicate ratings that are limited by strength of material or factors other than stability (tipping)

LOAD CHART

HC 285

With 92HI Offset Tip Boom + 16HL Fixed Jib

154,000 lb + 56,000 lb CB | **360°** | **ANSI B 30.5**

40’ Jib length

	260 ft			
	5°	15°	25°	
ft	lb	lb	lb	ft
51	32000*	-	-	51
52	32000*	-	-	52
53	32000*	-	-	53
54	32000*	-	-	54
60	32000*	32000*	-	60
70	32000*	32000*	32000*	70
80	32000*	32000*	30500*	80
90	32000*	32000*	28900*	90
100	32000*	32000*	27430*	100
110	32000*	32000*	26180*	110
120	29010	29020	24990*	120
130	25060	25070	23970*	130
140	21730	21730	21740	140
150	18870	18880	18890	150
160	16400	16400	16410	160
170	14240	14240	14250	170
180	12340	12340	12360	180
190	10650	10660	10670	190
200	9150	9160	9170	200
210	7800	7810	7820	210
220	6590	6590	6610	220
230	5500	5500	5520	230
240	4500	4510	4530	240
250	3600	3610	3630	250

Asterisk (*) areas on this chart indicate ratings that are limited by strength of material or factors other than stability (tipping)

LOAD CHART

HC 285

With 92HI Offset Tip Boom + 16HL Fixed Jib

154,000 lb + 56,000 lb CB | **360°** | **ANSI B 30.5**

50' Jib length

	130 ft			140 ft			150 ft			160 ft			
	5°	15°	25°	5°	15°	25°	5°	15°	25°	5°	15°	25°	
ft	lb	lb	lb	lb	lb	lb	lb	lb	lb	lb	lb	lb	ft
35	32000*	-	-	-	-	-	-	-	-	-	-	-	35
37	32000*	-	-	32000*	-	-	-	-	-	-	-	-	37
38	32000*	-	-	32000*	-	-	32000*	-	-	-	-	-	38
40	32000*	-	-	32000*	-	-	32000*	-	-	32000*	-	-	40
45	32000*	-	-	32000*	-	-	32000*	-	-	32000*	-	-	45
47	31860*	-	-	32000*	-	-	32000*	-	-	32000*	-	-	47
48	31720*	-	-	31910*	-	-	32000*	-	-	32000*	-	-	48
49	31600*	-	-	31770*	-	-	31920*	-	-	32000*	-	-	49
50	31480*	29020*	-	31700*	29070*	-	31790*	29160*	-	32000*	29180*	-	50
51	31340*	28850*	-	31590*	29010*	-	31790*	29090*	-	31860*	29100*	-	51
52	31250*	28770*	-	31410*	28870*	-	31680*	29030*	-	31730*	29100*	-	52
53	31040*	28750*	-	31310*	28840*	-	31570*	28860*	-	31710*	28920*	-	53
54	30970*	28610*	-	31260*	28690*	-	31340*	28820*	-	31600*	28870*	-	54
55	30850*	28480*	-	31050*	28670*	-	31260*	28760*	-	31510*	28770*	-	55
56	30800*	28480*	-	30990*	28550*	-	31190*	28620*	-	31370*	28720*	-	56
60	30340*	28100*	25190*	30560*	28200*	25620*	30690*	28310*	25980*	30920*	28450*	26290*	60
70	29290*	27300*	23020*	29530*	27440*	23430*	29710*	27570*	23810*	29910*	27720*	24230*	70
80	28280*	26580*	21240*	28640*	26720*	21710*	28840*	26920*	22050*	29030*	27100*	22490*	80
90	27410*	25900*	19760*	27730*	26110*	20180*	27990*	26250*	20630*	28240*	26470*	21040*	90
100	26690*	23770*	18510*	26990*	24650*	18930*	27330*	25420*	19380*	27570*	25940*	19740*	100
110	25980*	22020*	17420*	26380*	22760*	17850*	26590*	23570*	18240*	26850*	24320*	18680*	110
120	24550*	20510*	16530*	25740*	21280*	16940*	25980*	22000*	17290*	26250*	22740*	17710*	120
130	22840*	19260*	15730*	23920*	19990*	16140*	24920*	20630*	16500*	25670*	21290*	16900*	130
140	-	-	-	22310*	18860*	15450*	23240*	19440*	15830*	24210*	20130*	16130*	140
150	-	-	-	-	-	-	21780*	18460*	15240*	22760*	19050*	15550*	150
160	-	-	-	-	-	-	-	-	-	21380*	18120*	14990*	160

50' Jib length

	170 ft			180 ft			190 ft			200 ft			
	5°	15°	25°	5°	15°	25°	5°	15°	25°	5°	15°	25°	
ft	lb	lb	lb	lb	lb	lb	lb	lb	lb	lb	lb	lb	ft
41	32000*	-	-	-	-	-	-	-	-	-	-	-	41
42	32000*	-	-	32000*	-	-	-	-	-	-	-	-	42
44	32000*	-	-	32000*	-	-	32000*	-	-	-	-	-	44
45	32000*	-	-	32000*	-	-	32000*	-	-	32000*	-	-	45
50	32000*	29220*	-	32000*	-	-	32000*	-	-	32000*	-	-	50
60	31090*	28530*	26530*	31210*	28590*	26520*	31350*	28640*	26510*	31490*	28620*	-	60
70	30190*	27820*	24600*	30280*	27920*	24900*	30430*	27960*	25180*	30660*	28040*	25410*	70
80	29260*	27210*	22800*	29510*	27320*	23160*	29620*	27420*	23490*	29830*	27430*	23820*	80
90	28530*	26540*	21390*	28640*	26670*	21700*	28860*	26820*	22040*	29100*	26930*	22400*	90
100	27790*	26020*	20090*	28010*	26210*	20470*	28210*	26280*	20830*	28350*	26440*	21150*	100
110	27110*	25050*	19020*	27390*	25670*	19390*	27510*	25790*	19730*	27710*	25880*	19990*	110
120	26530*	23330*	18050*	26780*	24060*	18420*	26950*	24690*	18750*	27210*	25340*	19060*	120
130	25930*	21960*	17230*	26150*	22600*	17570*	26440*	23240*	17880*	26600*	23770*	18160*	130
140	25170*	20700*	16480*	25700*	21360*	16840*	25850*	21910*	17150*	25450	22440*	17400*	140
150	23640*	19630*	15830*	23820	20200*	16150*	23220	20770*	16480*	22610	21320*	16720*	150
160	21680	18710*	15290*	21360	19280*	15600*	20760	19790*	15850*	20140	20150	16160*	160
170	19540	17840*	14820*	19220	18400*	15080*	18610	18620	15330*	17990	18000	15640*	170
180	-	-	-	17330	17340	14710*	16730	16740	14900*	16090	16100	15180*	180
190	-	-	-	-	-	-	15050	15060	14520*	14420	14430	14440	190
200	-	-	-	-	-	-	-	-	-	12930	12940	12960	200

Asterisk (*) areas on this chart indicate ratings that are limited by strength of material or factors other than stability (tipping)

LOAD CHART

HC 285

With 92HI Offset Tip Boom + 16HL Fixed Jib

154,000 lb + 56,000 lb CB | **360°** | **ANSI B 30.5**

50' Jib length

	210 ft			220 ft			230 ft			240 ft			
	5°	15°	25°	5°	15°	25°	5°	15°	25°	5°	15°	25°	
ft	lb	lb	lb	lb	lb	lb	lb	lb	lb	lb	lb	lb	ft
47	32000*	-	-	-	-	-	-	-	-	-	-	-	47
48	32000*	-	-	32000*	-	-	-	-	-	-	-	-	48
49	32000*	-	-	32000*	-	-	32000*	-	-	-	-	-	49
50	32000*	-	-	32000*	-	-	32000*	-	-	-	-	-	50
51	32000*	-	-	32000*	-	-	32000*	-	-	32000*	-	-	51
55	32000*	-	-	32000*	-	-	32000*	-	-	32000*	-	-	55
56	31930*	-	-	32000*	-	-	32000*	-	-	32000*	-	-	56
60	31550*	28750*	-	31640*	28710*	-	31710*	28700*	-	31690*	28750*	-	60
70	30730*	28120*	25720*	30800*	28120*	26000*	30870*	28100*	26020*	30980*	28110*	26000*	70
80	29900*	27540*	24030*	30060*	27550*	24320*	30130*	27610*	24560*	30280*	27680*	24810*	80
90	29190*	26960*	22630*	29420*	27060*	22940*	29410*	27130*	23200*	29600*	27200*	23470*	90
100	28580*	26460*	21400*	28670*	26570*	21730*	28840*	26650*	21940*	28930*	26670*	22230*	100
110	27870*	26060*	20330*	28130*	26110*	20630*	28230*	26160*	20890*	28320*	26280*	21130*	110
120	27330*	25580*	19350*	27570*	25670*	19610*	27630*	25730*	19930*	27770*	25890*	20210*	120
130	26790*	24440*	18440*	26930*	25030*	18790*	27170*	25410*	19040*	26630	25460*	19300*	130
140	24840	23090*	17750*	24240	23570*	17990*	23870	23880	18270*	23290	23300	18490*	140
150	21990	21870*	17060*	21380	21390	17290*	21020	21030	17580*	20430	20440	17800*	150
160	19520	19530	16400*	18910	18920	16690*	18550	18560	16940*	17960	17970	17150*	160
170	17380	17390	15860*	16760	16770	16120*	16400	16410	16370*	15800	15810	15820	170
180	15480	15490	15410*	14860	14860	14880	14500	14500	14520	13910	13910	13930	180
190	13800	13810	13830	13180	13190	13200	12820	12830	12850	12220	12230	12250	190
200	12310	12320	12340	11680	11690	11710	11330	11340	11350	10720	10730	10750	200
210	10980	10990	11000	10340	10350	10370	9980	9990	10010	9390	9400	9410	210
220	-	-	-	9140	9150	9170	8780	8790	8800	8180	8180	8200	220
230	-	-	-	-	-	-	7680	7690	7710	7080	7090	7110	230
240	-	-	-	-	-	-	-	-	-	6090	6100	6120	240

50' Jib length

	250 ft			260 ft			
	5°	15°	25°	5°	15°	25°	
ft	lb	lb	lb	lb	lb	lb	ft
52	32000*	-	-	-	-	-	52
53	32000*	-	-	32000*	-	-	53
54	32000*	-	-	32000*	-	-	54
55	32000*	-	-	32000*	-	-	55
56	32000*	-	-	32000*	-	-	56
60	31770*	28690*	-	31810*	-	-	60
70	31130*	28150*	26050*	31120*	28240*	26030*	70
80	30390*	27730*	25030*	30360*	27650*	25240*	80
90	29720*	27170*	23720*	29800*	27220*	23940*	90
100	29050*	26740*	22500*	29150*	26770*	22700*	100
110	28470*	26350*	21440*	28580*	26420*	21630*	110
120	27970*	25890*	20420*	27980*	25980*	20660*	120
130	26020	25530*	19530*	25430	25440	19830*	130
140	22690	22690	18770*	22080	22090	19030*	140
150	19830	19840	18090*	19230	19230	18320*	150
160	17360	17360	17380	16750	16760	16770	160
170	15200	15200	15220	14600	14610	14620	170
180	13300	13310	13320	12690	12700	12710	180
190	11610	11620	11640	11010	11020	11040	190
200	10110	10120	10130	9510	9520	9530	200
210	8760	8770	8790	8160	8170	8180	210
220	7560	7570	7580	6940	6950	6970	220
230	6460	6470	6480	5850	5860	5870	230
240	5460	5470	5490	4850	4860	4880	240
250	4560	4570	4590	3950	3960	3970	250

Asterisk (*) areas on this chart indicate ratings that are limited by strength of material or factors other than stability (tipping)

LOAD CHART

HC 285

With 92HI Offset Tip Boom + 16HL Fixed Jib

154,000 lb + 56,000 lb CB | 360° | ANSI B 30.5

60' Jib length

	150 ft			160 ft			170 ft			180 ft			
	5°	15°	25°	5°	15°	25°	5°	15°	25°	5°	15°	25°	
ft	lb	lb	lb	lb	lb	lb	lb	lb	lb	lb	lb	lb	ft
40	30360*	-	-	-	-	-	-	-	-	-	-	-	40
41	30210*	-	-	-	-	-	-	-	-	-	-	-	41
42	30070*	-	-	30170*	-	-	-	-	-	-	-	-	42
43	29960*	-	-	30010*	-	-	30080*	-	-	-	-	-	43
44	29840*	-	-	29970*	-	-	29980*	-	-	-	-	-	44
45	29720*	-	-	29870*	-	-	29880*	-	-	29950*	-	-	45
50	29110*	26370*	-	29220*	-	-	29330*	-	-	29400*	-	-	50
51	29040*	26230*	-	29090*	-	-	29290*	-	-	29370*	-	-	51
52	28930*	26180*	-	28980*	-	-	29160*	-	-	29170*	-	-	52
53	28710*	26030*	-	28870*	-	-	29040*	-	-	29170*	-	-	53
54	28650*	26000*	-	28760*	-	-	28890*	-	-	29050*	-	-	54
55	28570*	25870*	-	28670*	-	-	28790*	-	-	28940*	-	-	55
60	27960*	25510*	22750*	28220*	25580*	-	28360*	25670*	-	28370*	25740*	-	60
70	27010*	24720*	20920*	27140*	24870*	21130*	27310*	24950*	21390*	27540*	24970*	21590*	70
80	26080*	24080*	19340*	26290*	24170*	19600*	26450*	24330*	19920*	26620*	24400*	20150*	80
90	25180*	23450*	17980*	25490*	23580*	18340*	25690*	23660*	18630*	25840*	23780*	18900*	90
100	24420*	22180*	16900*	24690*	22810*	17170*	24980*	23150*	17510*	25130*	23250*	17750*	100
110	23790*	20510*	15920*	24050*	21160*	16190*	24270*	21770*	16520*	24450*	22300*	16750*	110
120	23090*	19170*	15090*	23350*	19750*	15360*	23630*	20280*	15630*	23860*	20860*	15900*	120
130	21880*	17990*	14310*	22710*	18490*	14630*	23060*	19000*	14930*	23250*	19550*	15150*	130
140	20320*	16890*	13690*	21150*	17400*	13980*	21960*	17920*	14220*	22690*	18400*	14510*	140
150	19040*	15990*	13170*	19790*	16530*	13410*	20580*	16990*	13700*	21330*	17480*	13920*	150
160	-	-	-	18680*	15710*	12920*	19370*	16120*	13170*	20070*	16630*	13420*	160
170	-	-	-	-	-	-	18280*	15400*	12760*	18970*	15820*	12940*	170
180	-	-	-	-	-	-	-	-	-	17670	15180*	12550*	180

60' Jib length

	190 ft			200 ft			210 ft			220 ft			
	5°	15°	25°	5°	15°	25°	5°	15°	25°	5°	15°	25°	
ft	lb	lb	lb	lb	lb	lb	lb	lb	lb	lb	lb	lb	ft
46	29880*	-	-	-	-	-	-	-	-	-	-	-	46
47	29740*	-	-	29960*	-	-	-	-	-	-	-	-	47
48	29660*	-	-	29740*	-	-	-	-	-	-	-	-	48
49	29660*	-	-	29690*	-	-	29760*	-	-	-	-	-	49
50	29480*	-	-	29660*	-	-	29680*	-	-	29720*	-	-	50
56	28900*	-	-	29040*	-	-	29080*	-	-	29180*	-	-	56
57	28800*	-	-	28930*	-	-	28970*	-	-	29060*	-	-	57
58	28710*	-	-	28820*	-	-	28970*	-	-	28930*	-	-	58
59	28640*	-	-	28720*	-	-	28880*	-	-	28920*	-	-	59
60	28560*	25750*	-	28640*	25770*	-	28780*	25860*	-	28820*	25860*	-	60
70	27630*	25080*	21850*	27830*	25170*	22020*	27840*	25150*	22250*	28040*	25170*	22390*	70
80	26840*	24450*	20350*	26990*	24510*	20600*	27060*	24640*	20840*	27210*	24620*	21030*	80
90	26060*	23850*	19130*	26150*	23980*	19330*	26340*	24080*	19570*	26510*	24070*	19780*	90
100	25300*	23340*	18040*	25540*	23500*	18280*	25640*	23520*	18460*	25820*	23620*	18720*	100
110	24620*	22780*	17020*	24900*	22970*	17310*	25040*	23030*	17520*	25160*	23160*	17730*	110
120	24050*	21340*	16170*	24290*	21880*	16450*	24380*	22300*	16690*	24550*	22730*	16890*	120
130	23510*	20040*	15450*	23720*	20560*	15690*	23830*	20980*	15900*	24060*	21480*	16100*	130
140	22940*	18940*	14750*	23210*	19370*	15000*	23340*	19870*	15220*	23550*	20300*	15420*	140
150	22070*	17920*	14170*	22700*	18400*	14420*	22340	18770*	14630*	21730	19270*	14870*	150
160	20730*	17040*	13660*	20480	17460*	13870*	19870	17900*	14070*	19260	18320*	14300*	160
170	18960	16240*	13200*	18330	16640*	13370*	17720	17040*	13570*	17100	17110	13770*	170
180	17060	15560*	12780*	16440	15930*	12990*	15830	15830	13140*	15210	15210	13350*	180
190	15390	14930*	12400*	14760	14770	12610*	14150	14160	12810*	13520	13530	12950*	190
200	-	-	-	13270	13280	12290*	12650	12660	12440*	12030	12040	12060	200
210	-	-	-	-	-	-	11310	11320	11340	10680	10690	10710	210
220	-	-	-	-	-	-	-	-	-	9480	9490	9510	220

Asterisk (*) areas on this chart indicate ratings that are limited by strength of material or factors other than stability (tipping)

LOAD CHART

HC 285

With 92HI Offset Tip Boom + 16HL Fixed Jib

154,000 lb + 56,000 lb CB | **360°** | **ANSI B 30.5**

60’ Jib length

	230 ft			240 ft			250 ft			260 ft			
	5°	15°	25°	5°	15°	25°	5°	15°	25°	5°	15°	25°	
ft	lb	lb	lb	lb	lb	lb	lb	lb	lb	lb	lb	lb	ft
52	29460*	-	-	-	-	-	-	-	-	-	-	-	52
53	29390*	-	-	29450*	-	-	-	-	-	-	-	-	53
54	29340*	-	-	29390*	-	-	29430*	-	-	-	-	-	54
55	29300*	-	-	29210*	-	-	29300*	-	-	-	-	-	55
56	29120*	-	-	29120*	-	-	29250*	-	-	29270*	-	-	56
60	28820*	-	-	28880*	-	-	28950*	-	-	28910*	-	-	60
70	28070*	25220*	-	28110*	25220*	-	28130*	25220*	-	28170*	25200*	-	70
80	27230*	24680*	21240*	27350*	24650*	21410*	27440*	24740*	21550*	27490*	24780*	21710*	80
90	26530*	24130*	20010*	26650*	24190*	20190*	26740*	24200*	20350*	26850*	24230*	20500*	90
100	25850*	23640*	18940*	25990*	23730*	19070*	26140*	23780*	19290*	26240*	23790*	19470*	100
110	25240*	23170*	17980*	25420*	23260*	18140*	25600*	23340*	18360*	25600*	23430*	18530*	110
120	24690*	22780*	17110*	24900*	22890*	17330*	25040*	22900*	17510*	25100*	22990*	17660*	120
130	24150*	21950*	16380*	24280*	22350*	16560*	24430*	22540*	16780*	24530*	22570*	16970*	130
140	23680*	20700*	15700*	23630	21170*	15870*	23020	21510*	16070*	22430	21970*	16220*	140
150	21350	19690*	15050*	20770	20040*	15270*	20170	20180	15440*	19580	19580	15630*	150
160	18890	18660*	14480*	18300	18310	14720*	17690	17700	14870*	17100	17110	15040*	160
170	16730	16740	14010*	16150	16160	14200*	15540	15550	14360*	14940	14940	14590*	170
180	14840	14850	13570*	14250	14260	13750*	13630	13640	13660	13040	13040	13060	180
190	13150	13160	13160*	12560	12570	12590	11950	11960	11980	11350	11360	11370	190
200	11650	11660	11680	11060	11070	11090	10450	10460	10480	9840	9850	9870	200
210	10320	10330	10350	9720	9730	9750	9100	9110	9130	8500	8510	8530	210
220	9110	9120	9140	8510	8520	8540	7890	7900	7920	7280	7290	7310	220
230	8020	8030	8050	7420	7430	7450	6790	6800	6820	6180	6190	6210	230
240	-	-	-	6420	6430	6460	5800	5810	5830	5190	5200	5220	240
250	-	-	-	-	-	-	4900	4910	4930	4280	4290	4310	250
260	-	-	-	-	-	-	-	-	-	3450	3460	3480	260

Asterisk (*) areas on this chart indicate ratings that are limited by strength of material or factors other than stability (tipping)

LOAD CHART

HC 285

With 92HI Offset Tip Boom + 16HL Fixed Jib

154,000 lb + 56,000 lb CB | **360°** | **ANSI B 30.5**

70' Jib length

	180 ft			190 ft			200 ft			210 ft			
	5°	15°	25°	5°	15°	25°	5°	15°	25°	5°	15°	25°	
ft	lb	lb	lb	lb	lb	lb	lb	lb	lb	lb	lb	lb	ft
47	22290*	-	-	-	-	-	-	-	-	-	-	-	47
48	22260*	-	-	22320*	-	-	-	-	-	-	-	-	48
50	22090*	-	-	22150*	-	-	22190*	-	-	-	-	-	50
51	21980*	-	-	22010*	-	-	22140*	-	-	22200*	-	-	51
58	21380*	-	-	21470*	-	-	21600*	-	-	21580*	-	-	58
59	21290*	-	-	21400*	-	-	21460*	-	-	21580*	-	-	59
60	21240*	18970*	-	21340*	18990*	-	21390*	-	-	21520*	-	-	60
61	21110*	18880*	-	21240*	18970*	-	21340*	-	-	21360*	-	-	61
70	20490*	18400*	16750*	20590*	18470*	-	20680*	18470*	-	20750*	18540*	-	70
80	19720*	17870*	16340*	19850*	17920*	16340*	20040*	17960*	16410*	20130*	18030*	16370*	80
90	19130*	17350*	15870*	19240*	17420*	15940*	19350*	17540*	15930*	19530*	17590*	15990*	90
100	18550*	16910*	15430*	18680*	17000*	15470*	18820*	17070*	15560*	18950*	17130*	15570*	100
110	17940*	16440*	14630*	18070*	16540*	14830*	18280*	16640*	15010*	18360*	16730*	15200*	110
120	17440*	15920*	13840*	17620*	16060*	14090*	17770*	16210*	14300*	17900*	16350*	14440*	120
130	16910*	15520*	13200*	17090*	15590*	13370*	17280*	15730*	13570*	17400*	15900*	13790*	130
140	16440*	15110*	12590*	16680*	15250*	12820*	16860*	15370*	12970*	16970*	15480*	13150*	140
150	15880*	14750*	12070*	16120*	14840*	12260*	16360*	14990*	12450*	16590*	15130*	12600*	150
160	15480*	14420*	11580*	15670*	14510*	11770*	15910*	14650*	11960*	16060*	14770*	12120*	160
170	15070*	13760*	11200*	15280*	14140*	11360*	15480*	14390*	11560*	15630*	14500*	11720*	170
180	14690*	13190*	10840*	14900*	13510*	10990*	15090*	13850*	11170*	15240*	14140*	11330*	180
190	-	-	-	14510*	12980*	10660*	14730*	13270*	10810*	14440	13570*	10970*	190
200	-	-	-	-	-	-	13560	12780*	10510*	12950	12960	10670*	200
210	-	-	-	-	-	-	-	-	-	11600	11620	10380*	210

70' Jib length

	220 ft			230 ft			240 ft			250 ft			
	5°	15°	25°	5°	15°	25°	5°	15°	25°	5°	15°	25°	
ft	lb	lb	lb	lb	lb	lb	lb	lb	lb	lb	lb	lb	ft
52	22150*	-	-	-	-	-	-	-	-	-	-	-	52
54	21990*	-	-	21980*	-	-	-	-	-	-	-	-	54
55	21870*	-	-	21950*	-	-	21960*	-	-	-	-	-	55
57	21740*	-	-	21800*	-	-	21770*	-	-	21870*	-	-	57
60	21560*	-	-	21580*	-	-	21600*	-	-	21670*	-	-	60
70	20830*	18510*	-	20860*	18580*	-	20930*	18550*	-	20990*	18580*	-	70
80	20210*	18070*	16430*	20260*	18070*	16390*	20340*	18090*	16380*	20440*	18140*	16390*	80
90	19610*	17620*	16040*	19700*	17630*	16080*	19730*	17690*	16090*	19820*	17740*	16090*	90
100	19070*	17180*	15650*	19120*	17240*	15660*	19230*	17240*	15700*	19280*	17340*	15720*	100
110	18530*	16820*	15300*	18620*	16840*	15330*	18670*	16880*	15320*	18840*	16950*	15420*	110
120	18050*	16410*	14630*	18170*	16470*	14820*	18210*	16520*	14960*	18340*	16600*	15060*	120
130	17580*	15980*	13980*	17650*	16090*	14130*	17790*	16160*	14260*	17870*	16260*	14420*	130
140	17130*	15570*	13330*	17280*	15730*	13530*	17370*	15780*	13690*	17490*	15930*	13820*	140
150	16680*	15210*	12800*	16870*	15330*	12990*	16940*	15410*	13130*	17090*	15510*	13280*	150
160	16310*	14900*	12330*	16460*	15010*	12450*	16570*	15070*	12620*	16710*	15220*	12770*	160
170	15870*	14570*	11880*	16020*	14720*	12050*	16190*	14780*	12200*	15840	14910*	12340*	170
180	15480*	14320*	11470*	15130	14410*	11630*	14540	14510*	11760*	13940	13950	11940*	180
190	13820	13830	11130*	13450	13460	11250*	12860	12860	11420*	12250	12260	11540*	190
200	12320	12330	10820*	11950	11960	10930*	11360	11370	11090*	10740	10750	10770	200
210	10990	11000	10530*	10600	10610	10630	10010	10020	10040	9400	9410	9430	210
220	9780	9790	9810	9400	9410	9430	8800	8810	8830	8180	8190	8210	220
230	-	-	-	8300	8310	8330	7700	7710	7730	7080	7090	7120	230
240	-	-	-	-	-	-	6710	6720	6750	6090	6100	6120	240
250	-	-	-	-	-	-	-	-	-	5180	5190	5220	250

Asterisk (*) areas on this chart indicate ratings that are limited by strength of material or factors other than stability (tipping)

LOAD CHART

HC 285

With 92HI Offset Tip Boom + 16HL Fixed Jib

154,000 lb + 56,000 lb CB | **360°** | **ANSI B 30.5**

70’ Jib length

	260 ft			
	5°	15°	25°	
ft	lb	lb	lb	ft
58	21780*	-	-	58
60	21650*	-	-	60
61	21650*	-	-	61
70	21090*	18610*	-	70
80	20500*	18120*	16360*	80
90	19940*	17720*	16040*	90
100	19420*	17340*	15750*	100
110	18920*	16970*	15390*	110
120	18450*	16650*	15130*	120
130	18010*	16270*	14610*	130
140	17580*	15970*	13970*	140
150	17220*	15650*	13410*	150
160	16810*	15280*	12910*	160
170	15240	14990*	12500*	170
180	13340	13350	12080*	180
190	11650	11660	11680	190
200	10140	10150	10170	200
210	8800	8810	8830	210
220	7580	7590	7610	220
230	6480	6490	6510	230
240	5480	5490	5520	240
250	4570	4580	4610	250
260	3740	3750	3770	260

Asterisk (*) areas on this chart indicate ratings that are limited by strength of material or factors other than stability (tipping)

LOAD CHART

HC 285

With 92HI Offset Tip Boom + 16HL Fixed Jib

154,000 lb + 56,000 lb CB | **360°** | **ANSI B 30.5**

80' Jib length

	200 ft			210 ft			220 ft			230 ft			
	5°	15°	25°	5°	15°	25°	5°	15°	25°	5°	15°	25°	
ft	lb	lb	lb	lb	lb	lb	lb	lb	lb	lb	lb	lb	ft
52	17370*	-	-	-	-	-	-	-	-	-	-	-	52
53	17350*	-	-	17330*	-	-	-	-	-	-	-	-	53
55	17150*	-	-	17190*	-	-	17230*	-	-	-	-	-	55
56	17080*	-	-	17110*	-	-	17210*	-	-	17220*	-	-	56
60	16800*	-	-	16860*	-	-	16930*	-	-	16970*	-	-	60
70	16120*	14110*	-	16210*	14140*	-	16270*	14170*	-	16340*	14170*	-	70
80	15490*	13650*	12000*	15560*	13730*	12010*	15660*	13760*	11990*	15710*	13710*	-	80
90	14930*	13130*	11600*	15040*	13200*	11600*	15130*	13300*	11660*	15190*	13340*	11660*	90
100	14400*	12640*	11240*	14520*	12740*	11260*	14630*	12820*	11310*	14660*	12870*	11350*	100
110	13900*	12240*	10960*	14000*	12290*	10960*	14130*	12380*	10980*	14200*	12460*	11010*	110
120	13410*	11830*	10680*	13540*	11910*	10700*	13700*	11960*	10740*	13780*	12070*	10760*	120
130	12870*	11420*	10380*	13030*	11520*	10460*	13170*	11620*	10450*	13320*	11690*	10500*	130
140	12390*	11120*	10180*	12540*	11190*	10190*	12730*	11270*	10220*	12840*	11380*	10290*	140
150	11970*	10810*	9950*	12110*	10900*	9990*	12270*	10970*	10010*	12440*	11070*	10060*	150
160	11560*	10520*	9780*	11710*	10600*	9820*	11860*	10710*	9830*	12020*	10790*	9870*	160
170	11210*	10300*	9600*	11350*	10380*	9660*	11540*	10470*	9670*	11640*	10530*	9700*	170
180	10890*	10060*	9460*	11020*	10170*	9530*	11210*	10210*	9520*	11300*	10320*	9540*	180
190	10590*	9870*	9380*	10770*	9940*	9400*	10900*	10020*	9390*	11040*	10070*	9440*	190
200	10330*	9700*	9220*	10490*	9770*	9300*	10620*	9840*	9310*	10750*	9900*	9310*	200
210	-	-	-	10230*	9620*	9090*	10350*	9680*	9200*	10480*	9730*	9240*	210
220	-	-	-	-	-	-	10060	9530*	8970*	9670	9580*	9090*	220
230	-	-	-	-	-	-	-	-	-	8580	8590	8620	230

80' Jib length

	240 ft			250 ft			260 ft			
	5°	15°	25°	5°	15°	25°	5°	15°	25°	
ft	lb	lb	lb	lb	lb	lb	lb	lb	lb	ft
57	17150*	-	-	-	-	-	-	-	-	57
59	17060*	-	-	17070*	-	-	-	-	-	59
60	16980*	-	-	16990*	-	-	17020*	-	-	60
62	16880*	-	-	16860*	-	-	16930*	-	-	62
70	16330*	-	-	16400*	-	-	16460*	-	-	70
80	15790*	13770*	-	15830*	13740*	-	15930*	13760*	-	80
90	15260*	13380*	11690*	15310*	13420*	11660*	15400*	13390*	11680*	90
100	14740*	12960*	11330*	14820*	12990*	11350*	14870*	13010*	11360*	100
110	14320*	12540*	11060*	14390*	12590*	11040*	14450*	12620*	11060*	110
120	13890*	12120*	10770*	13930*	12160*	10810*	14030*	12270*	10830*	120
130	13440*	11760*	10540*	13570*	11800*	10560*	13650*	11880*	10560*	130
140	13000*	11430*	10290*	13160*	11520*	10320*	13280*	11570*	10340*	140
150	12560*	11120*	10100*	12700*	11220*	10110*	12860*	11250*	10160*	150
160	12180*	10830*	9890*	12300*	10920*	9930*	12440*	10980*	9970*	160
170	11780*	10580*	9750*	11950*	10650*	9750*	12070*	10740*	9800*	170
180	11440*	10350*	9560*	11580*	10410*	9620*	11690*	10490*	9610*	180
190	11160*	10150*	9460*	11250*	10200*	9460*	11380*	10270*	9480*	190
200	10870*	9960*	9330*	11000*	10000*	9370*	10440	10070*	9380*	200
210	10290	9810*	9250*	9680	9690	9240*	9080	9090	9110	210
220	9080	9090	9110	8470	8480	8500	7870	7880	7900	220
230	7980	7990	8020	7370	7380	7400	6770	6780	6800	230
240	6980	6990	7020	6360	6380	6400	5760	5770	5790	240
250	-	-	-	5460	5470	5500	4840	4860	4880	250
260	-	-	-	-	-	-	4010	4030	4050	260

Asterisk (*) areas on this chart indicate ratings that are limited by strength of material or factors other than stability (tipping)

LOAD CHART

HC 285

With 92HI Offset Tip Boom + 16HL Fixed Jib

154,000 lb + 56,000 lb CB | **360°** | **ANSI B 30.5**

90' Jib length

	230 ft			240 ft			250 ft			260 ft			
	5°	15°	25°	5°	15°	25°	5°	15°	25°	5°	15°	25°	
ft	lb	lb	lb	lb	lb	lb	lb	lb	lb	lb	lb	lb	ft
58	13740*	-	-	-	-	-	-	-	-	-	-	-	58
59	13670*	-	-	-	-	-	-	-	-	-	-	-	59
60	13610*	-	-	13650*	-	-	-	-	-	-	-	-	60
61	13550*	-	-	13580*	-	-	13640*	-	-	-	-	-	61
62	13510*	-	-	13570*	-	-	13580*	-	-	13580*	-	-	62
70	13100*	-	-	13130*	-	-	13140*	-	-	13200*	-	-	70
80	12550*	10340*	-	12570*	10400*	-	12620*	10410*	-	12680*	10410*	-	80
90	11970*	9930*	8530*	12040*	9940*	8500*	12110*	9990*	8520*	12190*	10000*	-	90
100	11380*	9550*	8250*	11480*	9580*	8220*	11540*	9600*	8230*	11650*	9620*	8230*	100
110	10830*	9180*	7980*	10950*	9240*	8010*	11040*	9280*	7990*	11150*	9290*	8000*	110
120	10360*	8860*	7760*	10490*	8890*	7770*	10590*	8930*	7760*	10660*	8960*	7780*	120
130	9930*	8550*	7570*	10040*	8590*	7580*	10160*	8620*	7580*	10220*	8670*	7580*	130
140	9560*	8280*	7350*	9650*	8310*	7380*	9760*	8360*	7370*	9840*	8390*	7370*	140
150	9200*	8020*	7200*	9270*	8070*	7220*	9360*	8130*	7230*	9470*	8170*	7210*	150
160	8840*	7820*	7030*	8940*	7860*	7040*	9060*	7910*	7070*	9150*	7940*	7080*	160
170	8550*	7610*	6890*	8650*	7640*	6920*	8750*	7680*	6900*	8830*	7730*	6930*	170
180	8260*	7380*	6750*	8390*	7440*	6780*	8480*	7510*	6780*	8540*	7550*	6800*	180
190	8030*	7210*	6670*	8110*	7260*	6650*	8190*	7320*	6670*	8290*	7350*	6670*	190
200	7790*	7060*	6560*	7890*	7100*	6570*	7970*	7150*	6580*	8050*	7210*	6570*	200
210	7600*	6950*	6490*	7660*	6990*	6460*	7770*	6990*	6470*	7840*	7050*	6490*	210
220	7390*	6820*	6400*	7480*	6850*	6400*	7540*	6890*	6400*	7620*	6900*	6410*	220
230	7230*	6700*	6350*	7310*	6730*	6340*	7370*	6760*	6340*	7010	6790*	6340*	230
240	-	-	-	7160*	6640*	6320*	6610	6620	6310*	6000	6020	6040	240
250	-	-	-	-	-	-	5700	5720	5740	5100	5110	5140	250
260	-	-	-	-	-	-	-	-	-	4260	4270	4300	260

100' Jib length

	250 ft			
	5°	15°	25°	
ft	lb	lb	lb	ft
63	10260*	-	-	63
64	10220*	-	-	64
65	10140*	-	-	65
66	10100*	-	-	66
70	9840*	-	-	70
80	9300*	7350*	-	80
90	8760*	7000*	-	90
100	8290*	6720*	5600*	100
110	7890*	6450*	5410*	110
120	7510*	6170*	5230*	120
130	7160*	5950*	5060*	130
140	6860*	5720*	4920*	140
150	6570*	5510*	4800*	150
160	6280*	5330*	4670*	160
170	6030*	5170*	4560*	170
180	5830*	5010*	4440*	180
190	5600*	4890*	4350*	190
200	5420*	4750*	4280*	200
210	5250*	4650*	4210*	210
220	5100*	4540*	4150*	220
230	4960*	4460*	4100*	230
240	4830*	4380*	4060*	240
250	4710*	4320*	4040*	250

Asterisk (*) areas on this chart indicate ratings that are limited by strength of material or factors other than stability (tipping)

LOAD CHART

HC 285

With 92HI Offset Tip Boom + 16HL Fixed Jib

127,000 lb + 56,000 lb CB | 360° | ANSI B 30.5

40' Jib length

	100 ft			110 ft			120 ft			130 ft			
	5°	15°	25°	5°	15°	25°	5°	15°	25°	5°	15°	25°	
ft	lb	lb	lb	lb	lb	lb	lb	lb	lb	lb	lb	lb	ft
29	32000*	-	-	-	-	-	-	-	-	-	-	-	29
30	32000*	-	-	32000*	-	-	-	-	-	-	-	-	30
31	32000*	-	-	32000*	-	-	-	-	-	-	-	-	31
32	32000*	-	-	32000*	-	-	32000*	-	-	-	-	-	32
33	32000*	-	-	32000*	-	-	32000*	-	-	32000*	-	-	33
35	32000*	-	-	32000*	-	-	32000*	-	-	32000*	-	-	35
40	32000*	32000*	-	32000*	32000*	-	32000*	32000*	-	32000*	32000*	-	40
50	32000*	32000*	30760*	32000*	32000*	31420*	32000*	32000*	32000*	32000*	32000*	32000*	50
60	32000*	32000*	27580*	32000*	32000*	28230*	32000*	32000*	28880*	32000*	32000*	29500*	60
70	32000*	32000*	24990*	32000*	32000*	25740*	32000*	32000*	26360*	32000*	32000*	27050*	70
80	32000*	29550*	22930*	32000*	30880*	23680*	32000*	32000*	24330*	32000*	32000*	24930*	80
90	31840*	26770*	21280*	32000*	28090*	21920*	32000*	29320*	22610*	32000*	30530*	23230*	90
100	28730*	24590*	19930*	30530*	25710*	20530*	32000*	26880*	21220*	32000*	27980*	21790*	100
110	-	-	-	27830*	23820*	19440*	29470*	24860*	19980*	30980*	25970*	20540*	110
120	-	-	-	-	-	-	27130*	23290*	19000*	28510*	24160*	19530*	120
130	-	-	-	-	-	-	-	-	-	26470*	22730*	18710*	130

40' Jib length

	140 ft			150 ft			160 ft			170 ft			
	5°	15°	25°	5°	15°	25°	5°	15°	25°	5°	15°	25°	
ft	lb	lb	lb	lb	lb	lb	lb	lb	lb	lb	lb	lb	ft
35	32000*	-	-	-	-	-	-	-	-	-	-	-	35
36	32000*	-	-	32000*	-	-	-	-	-	-	-	-	36
37	32000*	-	-	32000*	-	-	32000*	-	-	-	-	-	37
38	32000*	-	-	32000*	-	-	32000*	-	-	-	-	-	38
39	32000*	-	-	32000*	-	-	32000*	-	-	32000*	-	-	39
40	32000*	-	-	32000*	-	-	32000*	-	-	32000*	-	-	40
50	32000*	32000*	32000*	32000*	32000*	32000*	32000*	32000*	32000*	32000*	32000*	-	50
60	32000*	32000*	30130*	32000*	32000*	30600*	32000*	32000*	31160*	32000*	32000*	31560*	60
70	32000*	32000*	27600*	32000*	32000*	28110*	32000*	32000*	28660*	32000*	32000*	29150*	70
80	32000*	32000*	25600*	32000*	32000*	26080*	32000*	32000*	26680*	32000*	32000*	27080*	80
90	32000*	31670*	23800*	32000*	32000*	24370*	32000*	32000*	24930*	32000*	32000*	25360*	90
100	32000*	29090*	22380*	32000*	30070*	22870*	32000*	31080*	23420*	32000*	32000*	23890*	100
110	32000*	26930*	21110*	32000*	27880*	21620*	32000*	28890*	22160*	32000*	29850*	22610*	110
120	30010*	25160*	20090*	30120	26120*	20540*	29500	26960*	21040*	28880	27860*	21560*	120
130	27250	23620*	19220*	26610	24500*	19630*	25990	25360*	20100*	25360	25360	20590*	130
140	24280	22310*	18430*	23640	23110*	18900*	23010	23010	19340*	22390	22390	19700*	140
150	-	-	-	21100	21110	18190*	20470	20480	18570*	19840	19840	19020*	150
160	-	-	-	-	-	-	18270	18280	18060*	17640	17650	17660	160
170	-	-	-	-	-	-	-	-	-	15730	15730	15750	170

Asterisk (*) areas on this chart indicate ratings that are limited by strength of material or factors other than stability (tipping)

LOAD CHART

HC 285

With 92HI Offset Tip Boom + 16HL Fixed Jib

127,000 lb + 56,000 lb CB | 360° | ANSI B 30.5

40' Jib length

	180 ft			190 ft			200 ft			210 ft			
	5°	15°	25°	5°	15°	25°	5°	15°	25°	5°	15°	25°	
ft	lb	lb	lb	lb	lb	lb	lb	lb	lb	lb	lb	lb	ft
40	32000*	-	-	-	-	-	-	-	-	-	-	-	40
41	32000*	-	-	32000*	-	-	-	-	-	-	-	-	41
42	32000*	-	-	32000*	-	-	-	-	-	-	-	-	42
43	32000*	-	-	32000*	-	-	32000*	-	-	-	-	-	43
44	32000*	-	-	32000*	-	-	32000*	-	-	32000*	-	-	44
50	32000*	32000*	-	32000*	32000*	-	32000*	32000*	-	32000*	-	-	50
60	32000*	32000*	31910*	32000*	32000*	32000*	32000*	32000*	32000*	32000*	32000*	32000*	60
70	32000*	32000*	29630*	32000*	32000*	30020*	32000*	32000*	30400*	32000*	32000*	30830*	70
80	32000*	32000*	27610*	32000*	32000*	28070*	32000*	32000*	28490*	32000*	32000*	28880*	80
90	32000*	32000*	25840*	32000*	32000*	26290*	32000*	32000*	26740*	32000*	32000*	27140*	90
100	32000*	32000*	24420*	32000*	32000*	24860*	32000*	32000*	25290*	32000*	32000*	25660*	100
110	32000*	30670*	23100*	32000*	31570*	23590*	31600	31610	23950*	31000	31000	24380*	110
120	28570	28580	22020*	27980	27980	22410*	27360	27370	22790*	26760	26770	23170*	120
130	25050	25060	20950*	24460	24460	21410*	23840	23850	21850*	23240	23240	22210*	130
140	22090	22090	20140*	21490	21490	20500*	20860	20870	20880	20250	20260	20270	140
150	19540	19550	19390*	18940	18950	18960	18310	18320	18330	17710	17710	17720	150
160	17340	17340	17360	16740	16750	16760	16110	16120	16130	15500	15510	15520	160
170	15420	15430	15450	14820	14820	14840	14190	14200	14210	13580	13590	13600	170
180	13740	13750	13760	13140	13140	13160	12510	12510	12530	11890	11900	11910	180
190	-	-	-	11640	11650	11670	11010	11020	11030	10390	10400	10410	190
200	-	-	-	-	-	-	9690	9700	9710	9060	9070	9090	200
210	-	-	-	-	-	-	-	-	-	7870	7880	7900	210

40' Jib length

	220 ft			230 ft			240 ft			
	5°	15°	25°	5°	15°	25°	5°	15°	25°	
ft	lb	lb	lb	lb	lb	lb	lb	lb	lb	ft
46	32000*	-	-	-	-	-	-	-	-	46
47	32000*	-	-	32000*	-	-	-	-	-	47
48	32000*	-	-	32000*	-	-	32000*	-	-	48
49	32000*	-	-	32000*	-	-	32000*	-	-	49
50	32000*	-	-	32000*	-	-	32000*	-	-	50
60	32000*	32000*	32000*	32000*	32000*	32000*	32000*	32000*	-	60
70	32000*	32000*	31200*	32000*	32000*	31510*	32000*	32000*	31860*	70
80	32000*	32000*	29250*	32000*	32000*	29580*	32000*	32000*	29860*	80
90	32000*	32000*	27540*	32000*	32000*	27920*	32000*	32000*	28210*	90
100	32000*	32000*	26060*	32000*	32000*	26370*	32000*	32000*	26740*	100
110	30400	30400	24710*	30040	30040	25170*	29470	29470	25450*	110
120	26160	26160	23620*	25810	25810	23970*	25230	25230	24290*	120
130	22620	22630	22600*	22270	22280	22290	21690	21690	21700	130
140	19650	19660	19670	19300	19300	19310	18710	18720	18730	140
150	17100	17100	17120	16740	16750	16760	16160	16160	16180	150
160	14890	14900	14910	14530	14540	14550	13950	13950	13970	160
170	12970	12970	12990	12620	12620	12640	12020	12030	12040	170
180	11270	11270	11290	10920	10920	10930	10330	10330	10340	180
190	9770	9780	9790	9420	9420	9440	8820	8830	8840	190
200	8440	8450	8460	8080	8090	8100	7490	7490	7510	200
210	7250	7250	7270	6890	6900	6920	6290	6300	6320	210
220	6170	6180	6190	5820	5830	5840	5220	5220	5240	220
230	-	-	-	4850	4860	4880	4240	4250	4270	230
240	-	-	-	-	-	-	3370	3380	3400	240

Asterisk (*) areas on this chart indicate ratings that are limited by strength of material or factors other than stability (tipping)

LOAD CHART

HC 285

With 92HI Offset Tip Boom + 16HL Fixed Jib

127,000 lb + 56,000 lb CB | 360° | ANSI B 30.5

50' Jib length

	130 ft			140 ft			150 ft			160 ft			
	5°	15°	25°	5°	15°	25°	5°	15°	25°	5°	15°	25°	
ft	lb	lb	lb	lb	lb	lb	lb	lb	lb	lb	lb	lb	ft
35	32000*	-	-	-	-	-	-	-	-	-	-	-	35
37	32000*	-	-	32000*	-	-	-	-	-	-	-	-	37
38	32000*	-	-	32000*	-	-	32000*	-	-	-	-	-	38
40	32000*	-	-	32000*	-	-	32000*	-	-	32000*	-	-	40
45	32000*	-	-	32000*	-	-	32000*	-	-	32000*	-	-	45
47	31860*	-	-	32000*	-	-	32000*	-	-	32000*	-	-	47
48	31720*	-	-	31910*	-	-	32000*	-	-	32000*	-	-	48
49	31600*	-	-	31770*	-	-	31920*	-	-	32000*	-	-	49
50	31480*	29020*	-	31700*	29070*	-	31790*	29160*	-	32000*	29180*	-	50
51	31340*	28850*	-	31590*	29010*	-	31790*	29090*	-	31860*	29100*	-	51
52	31250*	28770*	-	31410*	28870*	-	31680*	29030*	-	31730*	29100*	-	52
53	31040*	28750*	-	31310*	28840*	-	31570*	28860*	-	31710*	28920*	-	53
54	30970*	28610*	-	31260*	28690*	-	31340*	28820*	-	31600*	28870*	-	54
55	30850*	28480*	-	31050*	28670*	-	31260*	28760*	-	31510*	28770*	-	55
56	30800*	28480*	-	30990*	28550*	-	31190*	28620*	-	31370*	28720*	-	56
60	30340*	28100*	25190*	30560*	28200*	25620*	30690*	28310*	25980*	30920*	28450*	26290*	60
70	29290*	27300*	23020*	29530*	27440*	23430*	29710*	27570*	23810*	29910*	27720*	24230*	70
80	28280*	26580*	21240*	28640*	26720*	21710*	28840*	26920*	22050*	29030*	27100*	22490*	80
90	27410*	25900*	19760*	27730*	26110*	20180*	27990*	26250*	20630*	28240*	26470*	21040*	90
100	26690*	23770*	18510*	26990*	24650*	18930*	27330*	25420*	19380*	27570*	25940*	19740*	100
110	25980*	22020*	17420*	26380*	22760*	17850*	26590*	23570*	18240*	26850*	24320*	18680*	110
120	24550*	20510*	16530*	25740*	21280*	16940*	25980*	22000*	17290*	26250*	22740*	17710*	120
130	22840*	19260*	15730*	23920*	19990*	16140*	24920*	20630*	16500*	25670*	21290*	16900*	130
140	-	-	-	22310*	18860*	15450*	23240*	19440*	15830*	23410	20130*	16130*	140
150	-	-	-	-	-	-	21490	18460*	15240*	20860	19050*	15550*	150
160	-	-	-	-	-	-	-	-	-	18660	18120*	14990*	160

50' Jib length

	170 ft			180 ft			190 ft			200 ft			
	5°	15°	25°	5°	15°	25°	5°	15°	25°	5°	15°	25°	
ft	lb	lb	lb	lb	lb	lb	lb	lb	lb	lb	lb	lb	ft
41	32000*	-	-	-	-	-	-	-	-	-	-	-	41
42	32000*	-	-	32000*	-	-	-	-	-	-	-	-	42
44	32000*	-	-	32000*	-	-	32000*	-	-	-	-	-	44
45	32000*	-	-	32000*	-	-	32000*	-	-	32000*	-	-	45
50	32000*	29220*	-	32000*	-	-	32000*	-	-	32000*	-	-	50
60	31090*	28530*	26530*	31210*	28590*	26520*	31350*	28640*	26510*	31490*	28620*	-	60
70	30190*	27820*	24600*	30280*	27920*	24900*	30430*	27960*	25180*	30660*	28040*	25410*	70
80	29260*	27210*	22800*	29510*	27320*	23160*	29620*	27420*	23490*	29830*	27430*	23820*	80
90	28530*	26540*	21390*	28640*	26670*	21700*	28860*	26820*	22040*	29100*	26930*	22400*	90
100	27790*	26020*	20090*	28010*	26210*	20470*	28210*	26280*	20830*	28350*	26440*	21150*	100
110	27110*	25050*	19020*	27390*	25670*	19390*	27510*	25790*	19730*	27710*	25880*	19990*	110
120	26530*	23330*	18050*	26780*	24060*	18420*	26950*	24690*	18750*	27210*	25340*	19060*	120
130	25750	21960*	17230*	25440	22600*	17570*	24830	23240*	17880*	24220	23770*	18160*	130
140	22780	20700*	16480*	22460	21360*	16840*	21860	21870	17150*	21230	21240	17400*	140
150	20220	19630*	15830*	19910	19920	16150*	19310	19320	16480*	18690	18690	16720*	150
160	18030	18030	15290*	17710	17720	15600*	17110	17120	15850*	16490	16500	16160*	160
170	16120	16120	14820*	15800	15800	15080*	15190	15200	15210	14560	14570	14580	170
180	-	-	-	14110	14120	14130	13500	13510	13520	12870	12880	12900	180
190	-	-	-	-	-	-	12010	12020	12040	11380	11390	11400	190
200	-	-	-	-	-	-	-	-	-	10040	10050	10070	200

Asterisk (*) areas on this chart indicate ratings that are limited by strength of material or factors other than stability (tipping)

LOAD CHART

HC 285

With 92HI Offset Tip Boom + 16HL Fixed Jib

127,000 lb + 56,000 lb CB | 360° | ANSI B 30.5

50' Jib length

	210 ft			220 ft			230 ft			240 ft			
	5°	15°	25°	5°	15°	25°	5°	15°	25°	5°	15°	25°	
ft	lb	lb	lb	lb	lb	lb	lb	lb	lb	lb	lb	lb	ft
47	32000*	-	-	-	-	-	-	-	-	-	-	-	47
48	32000*	-	-	32000*	-	-	-	-	-	-	-	-	48
49	32000*	-	-	32000*	-	-	32000*	-	-	-	-	-	49
50	32000*	-	-	32000*	-	-	32000*	-	-	-	-	-	50
51	32000*	-	-	32000*	-	-	32000*	-	-	32000*	-	-	51
55	32000*	-	-	32000*	-	-	32000*	-	-	32000*	-	-	55
56	31930*	-	-	32000*	-	-	32000*	-	-	32000*	-	-	56
60	31550*	28750*	-	31640*	28710*	-	31710*	28700*	-	31690*	28750*	-	60
70	30730*	28120*	25720*	30800*	28120*	26000*	30870*	28100*	26020*	30980*	28110*	26000*	70
80	29900*	27540*	24030*	30060*	27550*	24320*	30130*	27610*	24560*	30280*	27680*	24810*	80
90	29190*	26960*	22630*	29420*	27060*	22940*	29410*	27130*	23200*	29600*	27200*	23470*	90
100	28580*	26460*	21400*	28670*	26570*	21730*	28840*	26650*	21940*	28930*	26670*	22230*	100
110	27870*	26060*	20330*	28130*	26110*	20630*	28230*	26160*	20890*	28320*	26280*	21130*	110
120	27140	25580*	19350*	26540	25670*	19610*	26170	25730*	19930*	25580	25590	20210*	120
130	23610	23620	18440*	23000	23010	18790*	22640	22640	19040*	22060	22060	19300*	130
140	20630	20640	17750*	20020	20020	17990*	19650	19660	18270*	19070	19080	18490*	140
150	18080	18090	17060*	17460	17470	17290*	17110	17120	17130	16510	16520	16530	150
160	15870	15880	15890	15260	15270	15290	14900	14910	14920	14310	14320	14330	160
170	13950	13960	13970	13330	13340	13350	12970	12980	12990	12380	12390	12400	170
180	12260	12270	12280	11640	11640	11660	11280	11280	11300	10690	10690	10710	180
190	10760	10770	10790	10140	10150	10160	9770	9780	9800	9180	9190	9210	190
200	9430	9440	9460	8800	8810	8830	8440	8450	8460	7840	7850	7870	200
210	8240	8250	8260	7600	7610	7630	7240	7250	7270	6650	6660	6670	210
220	-	-	-	6530	6540	6560	6170	6180	6190	5570	5570	5590	220
230	-	-	-	-	-	-	5190	5200	5220	4590	4600	4620	230
240	-	-	-	-	-	-	-	-	-	3710	3720	3740	240

Asterisk (*) areas on this chart indicate ratings that are limited by strength of material or factors other than stability (tipping)

LOAD CHART

HC 285

With 92HI Offset Tip Boom + 16HL Fixed Jib

127,000 lb + 56,000 lb CB | 360° | ANSI B 30.5

60' Jib length

	150 ft			160 ft			170 ft			180 ft			
	5°	15°	25°	5°	15°	25°	5°	15°	25°	5°	15°	25°	
ft	lb	lb	lb	lb	lb	lb	lb	lb	lb	lb	lb	lb	ft
40	30360*	-	-	-	-	-	-	-	-	-	-	-	40
41	30210*	-	-	-	-	-	-	-	-	-	-	-	41
42	30070*	-	-	30170*	-	-	-	-	-	-	-	-	42
43	29960*	-	-	30010*	-	-	30080*	-	-	-	-	-	43
44	29840*	-	-	29970*	-	-	29980*	-	-	-	-	-	44
45	29720*	-	-	29870*	-	-	29880*	-	-	29950*	-	-	45
50	29110*	26370*	-	29220*	-	-	29330*	-	-	29400*	-	-	50
51	29040*	26230*	-	29090*	-	-	29290*	-	-	29370*	-	-	51
52	28930*	26180*	-	28980*	-	-	29160*	-	-	29170*	-	-	52
53	28710*	26030*	-	28870*	-	-	29040*	-	-	29170*	-	-	53
54	28650*	26000*	-	28760*	-	-	28890*	-	-	29050*	-	-	54
55	28570*	25870*	-	28670*	-	-	28790*	-	-	28940*	-	-	55
60	27960*	25510*	22750*	28220*	25580*	-	28360*	25670*	-	28370*	25740*	-	60
70	27010*	24720*	20920*	27140*	24870*	21130*	27310*	24950*	21390*	27540*	24970*	21590*	70
80	26080*	24080*	19340*	26290*	24170*	19600*	26450*	24330*	19920*	26620*	24400*	20150*	80
90	25180*	23450*	17980*	25490*	23580*	18340*	25690*	23660*	18630*	25840*	23780*	18900*	90
100	24420*	22180*	16900*	24690*	22810*	17170*	24980*	23150*	17510*	25130*	23250*	17750*	100
110	23790*	20510*	15920*	24050*	21160*	16190*	24270*	21770*	16520*	24450*	22300*	16750*	110
120	23090*	19170*	15090*	23350*	19750*	15360*	23630*	20280*	15630*	23860*	20860*	15900*	120
130	21880*	17990*	14310*	22710*	18490*	14630*	23060*	19000*	14930*	23250*	19550*	15150*	130
140	20320*	16890*	13690*	21150*	17400*	13980*	21960*	17920*	14220*	22690*	18400*	14510*	140
150	19040*	15990*	13170*	19790*	16530*	13410*	20580*	16990*	13700*	20250	17480*	13920*	150
160	-	-	-	18680*	15710*	12920*	18380	16120*	13170*	18060	16630*	13420*	160
170	-	-	-	-	-	-	16470	15400*	12760*	16130	15820*	12940*	170
180	-	-	-	-	-	-	-	-	-	14450	14460	12550*	180

60' Jib length

	190 ft			200 ft			210 ft			220 ft			
	5°	15°	25°	5°	15°	25°	5°	15°	25°	5°	15°	25°	
ft	lb	lb	lb	lb	lb	lb	lb	lb	lb	lb	lb	lb	ft
46	29880*	-	-	-	-	-	-	-	-	-	-	-	46
47	29740*	-	-	29960*	-	-	-	-	-	-	-	-	47
48	29660*	-	-	29740*	-	-	-	-	-	-	-	-	48
49	29660*	-	-	29690*	-	-	29760*	-	-	-	-	-	49
50	29480*	-	-	29660*	-	-	29680*	-	-	29720*	-	-	50
56	28900*	-	-	29040*	-	-	29080*	-	-	29180*	-	-	56
57	28800*	-	-	28930*	-	-	28970*	-	-	29060*	-	-	57
58	28710*	-	-	28820*	-	-	28970*	-	-	28930*	-	-	58
59	28640*	-	-	28720*	-	-	28880*	-	-	28920*	-	-	59
60	28560*	25750*	-	28640*	25770*	-	28780*	25860*	-	28820*	25860*	-	60
70	27630*	25080*	21850*	27830*	25170*	22020*	27840*	25150*	22250*	28040*	25170*	22390*	70
80	26840*	24450*	20350*	26990*	24510*	20600*	27060*	24640*	20840*	27210*	24620*	21030*	80
90	26060*	23850*	19130*	26150*	23980*	19330*	26340*	24080*	19570*	26510*	24070*	19780*	90
100	25300*	23340*	18040*	25540*	23500*	18280*	25640*	23520*	18460*	25820*	23620*	18720*	100
110	24620*	22780*	17020*	24900*	22970*	17310*	25040*	23030*	17520*	25160*	23160*	17730*	110
120	24050*	21340*	16170*	24290*	21880*	16450*	24380*	22300*	16690*	24550*	22730*	16890*	120
130	23510*	20040*	15450*	23720*	20560*	15690*	23830*	20980*	15900*	23360	21480*	16100*	130
140	22200	18940*	14750*	21590	19370*	15000*	20980	19870*	15220*	20370	20300*	15420*	140
150	19660	17920*	14170*	19040	18400*	14420*	18430	18440	14630*	17820	17830	14870*	150
160	17450	17040*	13660*	16830	16840	13870*	16220	16230	14070*	15610	15620	14300*	160
170	15530	15540	13200*	14910	14920	13370*	14300	14310	13570*	13680	13690	13710	170
180	13840	13850	12780*	13220	13230	12990*	12610	12610	12630	11990	11990	12010	180
190	12350	12360	12380	11720	11730	11750	11110	11120	11130	10480	10490	10510	190
200	-	-	-	10390	10400	10420	9770	9780	9800	9150	9160	9180	200
210	-	-	-	-	-	-	8570	8580	8600	7940	7950	7970	210
220	-	-	-	-	-	-	-	-	-	6880	6890	6910	220

Asterisk (*) areas on this chart indicate ratings that are limited by strength of material or factors other than stability (tipping)

LOAD CHART

HC 285

With 92HI Offset Tip Boom + 16HL Fixed Jib

127,000 lb + 56,000 lb CB | 360° | ANSI B 30.5

60’ Jib length

	230 ft			240 ft			
	5°	15°	25°	5°	15°	25°	
ft	lb	lb	lb	lb	lb	lb	ft
52	29460*	-	-	-	-	-	52
53	29390*	-	-	29450*	-	-	53
54	29340*	-	-	29390*	-	-	54
55	29300*	-	-	29210*	-	-	55
56	29120*	-	-	29120*	-	-	56
60	28820*	-	-	28880*	-	-	60
70	28070*	25220*	-	28110*	25220*	-	70
80	27230*	24680*	21240*	27350*	24650*	21410*	80
90	26530*	24130*	20010*	26650*	24190*	20190*	90
100	25850*	23640*	18940*	25990*	23730*	19070*	100
110	25240*	23170*	17980*	25420*	23260*	18140*	110
120	24690*	22780*	17110*	24900*	22890*	17330*	120
130	22990	21950*	16380*	22390	22350*	16560*	130
140	20000	20010	15700*	19420	19420	15870*	140
150	17440	17450	15050*	16860	16870	15270*	150
160	15240	15250	14480*	14650	14660	14670	160
170	13310	13320	13340	12720	12730	12740	170
180	11620	11630	11640	11030	11040	11050	180
190	10110	10120	10140	9520	9530	9550	190
200	8770	8780	8800	8180	8190	8210	200
210	7580	7590	7610	6980	6990	7010	210
220	6500	6510	6530	5900	5910	5930	220
230	5530	5540	5560	4930	4940	4960	230
240	-	-	-	4040	4050	4080	240

Asterisk (*) areas on this chart indicate ratings that are limited by strength of material or factors other than stability (tipping)

LOAD CHART

HC 285

With 92HI Offset Tip Boom + 16HL Fixed Jib

127,000 lb + 56,000 lb CB | 360° | ANSI B 30.5

70' Jib length

	180 ft			190 ft			200 ft			210 ft			
	5°	15°	25°	5°	15°	25°	5°	15°	25°	5°	15°	25°	
ft	lb	lb	lb	lb	lb	lb	lb	lb	lb	lb	lb	lb	ft
47	22290*	-	-	-	-	-	-	-	-	-	-	-	47
48	22260*	-	-	22320*	-	-	-	-	-	-	-	-	48
50	22090*	-	-	22150*	-	-	22190*	-	-	-	-	-	50
51	21980*	-	-	22010*	-	-	22140*	-	-	22200*	-	-	51
58	21380*	-	-	21470*	-	-	21600*	-	-	21580*	-	-	58
60	21240*	18970*	-	21340*	18990*	-	21390*	-	-	21520*	-	-	60
70	20490*	18400*	16750*	20590*	18470*	-	20680*	18470*	-	20750*	18540*	-	70
80	19720*	17870*	16340*	19850*	17920*	16340*	20040*	17960*	16410*	20130*	18030*	16370*	80
90	19130*	17350*	15870*	19240*	17420*	15940*	19350*	17540*	15930*	19530*	17590*	15990*	90
100	18550*	16910*	15430*	18680*	17000*	15470*	18820*	17070*	15560*	18950*	17130*	15570*	100
110	17940*	16440*	14630*	18070*	16540*	14830*	18280*	16640*	15010*	18360*	16730*	15200*	110
120	17440*	15920*	13840*	17620*	16060*	14090*	17770*	16210*	14300*	17900*	16350*	14440*	120
130	16910*	15520*	13200*	17090*	15590*	13370*	17280*	15730*	13570*	17400*	15900*	13790*	130
140	16440*	15110*	12590*	16680*	15250*	12820*	16860*	15370*	12970*	16970*	15480*	13150*	140
150	15880*	14750*	12070*	16120*	14840*	12260*	16360*	14990*	12450*	16590*	15130*	12600*	150
160	15480*	14420*	11580*	15670*	14510*	11770*	15910*	14650*	11960*	16060*	14770*	12120*	160
170	15070*	13760*	11200*	15280*	14140*	11360*	15210	14390*	11560*	14600	14500*	11720*	170
180	14690*	13190*	10840*	14140	13510*	10990*	13520	13530	11170*	12910	12920	11330*	180
190	-	-	-	12640	12650	10660*	12020	12030	10810*	11400	11410	10970*	190
200	-	-	-	-	-	-	10680	10690	10510*	10070	10080	10100	200
210	-	-	-	-	-	-	-	-	-	8860	8880	8900	210

70' Jib length

	220 ft			230 ft			240 ft			
	5°	15°	25°	5°	15°	25°	5°	15°	25°	
ft	lb	lb	lb	lb	lb	lb	lb	lb	lb	ft
52	22150*	-	-	-	-	-	-	-	-	52
54	21990*	-	-	21980*	-	-	-	-	-	54
55	21870*	-	-	21950*	-	-	21960*	-	-	55
57	21740*	-	-	21800*	-	-	21770*	-	-	57
60	21560*	-	-	21580*	-	-	21600*	-	-	60
70	20830*	18510*	-	20860*	18580*	-	20930*	18550*	-	70
80	20210*	18070*	16430*	20260*	18070*	16390*	20340*	18090*	16380*	80
90	19610*	17620*	16040*	19700*	17630*	16080*	19730*	17690*	16090*	90
100	19070*	17180*	15650*	19120*	17240*	15660*	19230*	17240*	15700*	100
110	18530*	16820*	15300*	18620*	16840*	15330*	18670*	16880*	15320*	110
120	18050*	16410*	14630*	18170*	16470*	14820*	18210*	16520*	14960*	120
130	17580*	15980*	13980*	17650*	16090*	14130*	17790*	16160*	14260*	130
140	17130*	15570*	13330*	17280*	15730*	13530*	17370*	15780*	13690*	140
150	16680*	15210*	12800*	16870*	15330*	12990*	16940*	15410*	13130*	150
160	15910	14900*	12330*	15540	15010*	12450*	14950	14960	12620*	160
170	13980	13990	11880*	13610	13620	12050*	13020	13030	12200*	170
180	12290	12300	11470*	11910	11920	11630*	11320	11330	11350	180
190	10780	10790	10810	10400	10410	10430	9820	9820	9840	190
200	9440	9450	9470	9070	9080	9100	8470	8480	8500	200
210	8250	8260	8280	7870	7880	7900	7270	7280	7300	210
220	7170	7180	7200	6790	6800	6820	6190	6200	6220	220
230	-	-	-	5820	5830	5850	5210	5220	5240	230
240	-	-	-	-	-	-	4330	4340	4370	240

Asterisk (*) areas on this chart indicate ratings that are limited by strength of material or factors other than stability (tipping)

LOAD CHART

HC 285

With 92HI Offset Tip Boom + 16HL Fixed Jib

127,000 lb + 56,000 lb CB | **360°** | **ANSI B 30.5**

80' Jib length

	200 ft			210 ft			220 ft			230 ft			
	5°	15°	25°	5°	15°	25°	5°	15°	25°	5°	15°	25°	
ft	lb	lb	lb	lb	lb	lb	lb	lb	lb	lb	lb	lb	ft
52	17370*	-	-	-	-	-	-	-	-	-	-	-	52
53	17350*	-	-	17330*	-	-	-	-	-	-	-	-	53
55	17150*	-	-	17190*	-	-	17230*	-	-	-	-	-	55
56	17080*	-	-	17110*	-	-	17210*	-	-	17220*	-	-	56
60	16800*	-	-	16860*	-	-	16930*	-	-	16970*	-	-	60
70	16120*	14110*	-	16210*	14140*	-	16270*	14170*	-	16340*	14170*	-	70
80	15490*	13650*	12000*	15560*	13730*	12010*	15660*	13760*	11990*	15710*	13710*	-	80
90	14930*	13130*	11600*	15040*	13200*	11600*	15130*	13300*	11660*	15190*	13340*	11660*	90
100	14400*	12640*	11240*	14520*	12740*	11260*	14630*	12820*	11310*	14660*	12870*	11350*	100
110	13900*	12240*	10960*	14000*	12290*	10960*	14130*	12380*	10980*	14200*	12460*	11010*	110
120	13410*	11830*	10680*	13540*	11910*	10700*	13700*	11960*	10740*	13780*	12070*	10760*	120
130	12870*	11420*	10380*	13030*	11520*	10460*	13170*	11620*	10450*	13320*	11690*	10500*	130
140	12390*	11120*	10180*	12540*	11190*	10190*	12730*	11270*	10220*	12840*	11380*	10290*	140
150	11970*	10810*	9950*	12110*	10900*	9990*	12270*	10970*	10010*	12440*	11070*	10060*	150
160	11560*	10520*	9780*	11710*	10600*	9820*	11860*	10710*	9830*	12020*	10790*	9870*	160
170	11210*	10300*	9600*	11350*	10380*	9660*	11540*	10470*	9670*	11640*	10530*	9700*	170
180	10890*	10060*	9460*	11020*	10170*	9530*	11210*	10210*	9520*	11300*	10320*	9540*	180
190	10590*	9870*	9380*	10770*	9940*	9400*	10900*	10020*	9390*	10690	10070*	9440*	190
200	10330*	9700*	9220*	10340	9770*	9300*	9730	9740	9310*	9350	9360	9310*	200
210	-	-	-	9150	9160	9090*	8530	8540	8570	8150	8160	8180	210
220	-	-	-	-	-	-	7450	7460	7480	7060	7070	7100	220
230	-	-	-	-	-	-	-	-	-	6090	6100	6130	230

80' Jib length

	240 ft			
	5°	15°	25°	
ft	lb	lb	lb	ft
57	17150*	-	-	57
59	17060*	-	-	59
60	16980*	-	-	60
62	16880*	-	-	62
70	16330*	-	-	70
80	15790*	13770*	-	80
90	15260*	13380*	11690*	90
100	14740*	12960*	11330*	100
110	14320*	12540*	11060*	110
120	13890*	12120*	10770*	120
130	13440*	11760*	10540*	130
140	13000*	11430*	10290*	140
150	12560*	11120*	10100*	150
160	12180*	10830*	9890*	160
170	11780*	10580*	9750*	170
180	11440*	10350*	9560*	180
190	10100	10110	9460*	190
200	8750	8760	8780	200
210	7550	7560	7580	210
220	6470	6480	6500	220
230	5490	5500	5530	230
240	4600	4610	4640	240

Asterisk (*) areas on this chart indicate ratings that are limited by strength of material or factors other than stability (tipping)

LOAD CHART

HC 285

With 92HI Offset Tip Boom + 16HL Fixed Jib

127,000 lb + 56,000 lb CB | 360° | ANSI B 30.5

90' Jib length

	230 ft			240 ft			
	5°	15°	25°	5°	15°	25°	
ft	lb	lb	lb	lb	lb	lb	ft
58	13740*	-	-	-	-	-	58
59	13670*	-	-	-	-	-	59
60	13610*	-	-	13650*	-	-	60
61	13550*	-	-	13580*	-	-	61
62	13510*	-	-	13570*	-	-	62
70	13100*	-	-	13130*	-	-	70
80	12550*	10340*	-	12570*	10400*	-	80
90	11970*	9930*	8530*	12040*	9940*	8500*	90
100	11380*	9550*	8250*	11480*	9580*	8220*	100
110	10830*	9180*	7980*	10950*	9240*	8010*	110
120	10360*	8860*	7760*	10490*	8890*	7770*	120
130	9930*	8550*	7570*	10040*	8590*	7580*	130
140	9560*	8280*	7350*	9650*	8310*	7380*	140
150	9200*	8020*	7200*	9270*	8070*	7220*	150
160	8840*	7820*	7030*	8940*	7860*	7040*	160
170	8550*	7610*	6890*	8650*	7640*	6920*	170
180	8260*	7380*	6750*	8390*	7440*	6780*	180
190	8030*	7210*	6670*	8110*	7260*	6650*	190
200	7790*	7060*	6560*	7890*	7100*	6570*	200
210	7600*	6950*	6490*	7660*	6990*	6460*	210
220	7310	6820*	6400*	6720	6730	6400*	220
230	6320	6340	6350*	5730	5740	5770	230
240	-	-	-	4840	4860	4880	240

Asterisk (*) areas on this chart indicate ratings that are limited by strength of material or factors other than stability (tipping)

NOTES TO LIFTING CAPACITY

Main Boom Chart Information

92HI Offset Tip Boom

Boom length (ft)	25' 92HI Inner	15' 92HT Center	20' 92HT Center	10' 92ST Center	50' 92ST Center	40' 92H Outer
100	1	1	1	0	0	1
110	1	1	1	1	0	1
120	1	1	1	2	0	1
130	1	1	0	0	1	1
140	1	1	0	1	1	1
150	1	1	1	0	1	1
160	1	1	1	1	1	1
170	1	1	1	2	1	1
180	1	1	0	0	2	1
190	1	1	0	1	2	1
200	1	1	1	0	2	1
210	1	1	1	1	2	1
220	1	1	1	2	2	1
230	1	1	0	0	3	1
240	1	1	0	1	3	1
250	1	1	1	0	3	1
260	1	1	1	1	3	1
270	1	1	1	2	3	1
280	1	1	0	0	4	1

16HL Fixed Jib

Jib length (ft)	20' 16HL Inner	10' 16HL Center	20' 16HL Center	20' 16HL Outer
40	1	0	0	1
50	1	1	0	1
60	1	0	1	1
70	1	1	1	1
80	1	0	2	1
90	1	1	2	1
100	1	0	3	1

TECHNICAL DESCRIPTION

HC 285

Hydraulic Crawler Crane

Maximum lifting capacity
285 tons @ 16 ft radius.

300 ft maximum lift crane boom
- 92HI tubular chord boom, pin connected.
- 65 ft inner/outer basic boom with addition of 15 ft insert in combination with available 10 / 20 / 50 inserts allows boom compositions from 80 to 300 ft in 10 ft increments.

Robust engine
- Cummins Model QSL9 diesel engine supplies 350 HP (261 kW) Tier 4 engine. 180 gallons fuel capacity.

Environmental operator's cab
- Designed to provide excellent viewing range and quiet, comfortable operation.
- 37 in. wide cab has wide curved windows on both top and bottom.
- Easy-to-operate modular and ergonomically designed controls reduce operator fatigue and increase productivity.
- Load moment indicator with interactive screen features a shockless stop system. Operator can select from three display modes: loaded condition diagram, rated lifting curve, and rated lifting load table.
- LMI user interface available in English, Spanish, Portuguese and French.
- Adjustable operator's seat, radio, air conditioner, overhead window, sun visor, overhead and front wipers, and drum rotation indicators standard.

Heavy duty carbody and crawlers
- Fabricated steel carbody is deep box constructed with square axles for the crawler side frames. Precision machined top supports anti-friction bearing and multiple pass hydraulic swivel joint.
- Crawlers have high alloy steel tumbler yokes and rigid fabricated structures with built-in sealed lubrication system.
- 48'' crawler shoes.
- Travel mechanism contained within shoe width.
- Travel speed setting – 0.67 mph.
- 30 % (17°) gradeability.

Powerful, high-speed hoist system
- Two identical independent main and auxiliary load hoisting drums provide ample lifting power. Drums are grooved for 28 mm diameter rope. Max. line speed is 524 fpm, max. single line pull is 54,630 lb. Rated single line pull is 40,850 lb.
  Free fall option available on main and auxiliary drum.
- Each drum, including optional third, has power up/down. Load hoists are further controllable in stepless mode.
- Ample work space in front of drums allows easy access for cable installation and maintenance.
- Internal wet disc brake/clutch.
- 1.5 rpm swing speed.

High capacity, dependable hydraulic system
- Open circuit system has 2 variable displacement piston pumps which supply power to the travel and hoisting functions, 3 gear pumps provide power for swing, hydraulic cylinders and pilot pressure.
- Hydraulic reservoir with 90 gallons capacity and 10 micron filtration. System capacity is 150 gallons.
- Component working range is between -4 and 203° F.

Removable upper counterweight
- 13 pieces for 12 RH/LH slabs + base unless 14 pieces if including CWRS (counterweight removable system).
- Additional two piece carbody counterweight (56,000 lbs).
- Hydraulic counterweight removal system is standard and makes the HC 285 one of the most transportable cranes in its class.
- Moves on 11 trucks with 10'-6" wide and 12'-0" high. At 11 ft 6 in. wide and 11 ft 3 in. high, the basic HC 285 will transport on a standard lowboy trailer.

Options include
- Third drum.
- Single sheave extension.
- 16HL jib – 32,000 lb.
- Tram style fall protection for working at heights.
- Reeving winch.

TRANSPORT EXAMPLE FOR HC 285

with 300’ Main Boom + 100’ 16HL Jib

LOAD NO. 1 – Step Deck / Flat Bed	
3 x RH counterweight overlay @ 12,810 lb each	38,430 lb
TOTAL LOAD	**38,430 lb**
LOAD NO. 2 – Step Deck / Flat Bed	
3 x RH counterweight overlay @ 12,810 lb each	38,430 lb
TOTAL LOAD	**38,430 lb**
LOAD NO. 3 – Step Deck / Flat Bed	
3 x LH counterweight overlay @ 13,955 lb each	41,865 lb
TOTAL LOAD	**41,865 lb**
LOAD NO. 4 – Step Deck / Flat Bed	
3 x LH counterweight overlay @ 13,955 lb each	41,865 lb
TOTAL LOAD	**41,865 lb**
LOAD NO 5. – Step Deck / Flat Bed	
Counterweight base	42,100 lb
TOTAL LOAD	**42,100 lb**
LOAD NO 6. – Step Deck / Load height 9'1" with dunnage	
Carbody counterweight	28,000 lb
92ST center, 50'	7,290 lb
TOTAL LOAD	**35,290 lb**
LOAD NO 7. – Step Deck / Load height 9'1" with dunnage	
Carbody counterweight	28,000 lb
92ST center, 50'	7,290 lb
TOTAL LOAD	**35,290 lb**
LOAD NO 8. – Step Deck / Load leveler required	
92ST center, 50'	7,290 lb
Loose parts crate	1,500 lb
TOTAL LOAD	**8,790 lb**
LOAD NO 9. – Step Deck / Load leveler required	
92ST center, 50'	7,290 lb
Lift sling, sideframe (21.3 ft)	250 lb
Lift sling, counterweight (14.5 ft)	210 lb
Load block, 30 US tons	750 lb
Standfast tram	150 lb
Pallet, catwalk / steps	1,000 lb
TOTAL LOAD	**9,650 lb**
LOAD NO 10. – Step Deck	
Hook block, 285 US tons single	8,000 lb
92HT center, 20'	3,820 lb
92HT center, 15'	3,090 lb
TOTAL LOAD	**14,910 lb**
LOAD NO 11. – Step Deck	
92HI boom inner, 25'	10,680 lb
92ST center, 10'	1,820 lb
Jib pendants, 16HL	1,000 lb
Pendant spreader, 16HL	150 lb
TOTAL LOAD	**13,650 lb**
LOAD NO 12. – Step Deck	
92H boom outer, 40'	11,890 lb
TOTAL LOAD	**11,890 lb**

TRANSPORT EXAMPLE FOR HC 285

with 300’ Main Boom + 100’ 16HL Jib

LOAD NO 13. – Step Deck	
Jib inner 20', 16HL (with mast)	800 lb
Jib center 10', 16HL	300 lb
3 x jib center 20', 16HL @ 500 lb each	1,500 lb
Jib outer 20', 16HL	900 lb
3 x wire rope @ 2,000 lb each	6,000 lb
TOTAL LOAD	**9,500 lb**
LOAD NO 14. – Step Deck / Flat Bed	
Right crawler sideframe	49,400 lb
TOTAL LOAD	**49,400 lb**
LOAD NO 15. – Step Deck / Flat Bed	
Left crawler sideframe	49,400 lb
TOTAL LOAD	**49,400 lb**
LOAD NO 16. – Step Deck / Flat Bed	
HC 285 base machine with CWRS* (no rope) (boom hoist rope only)	100,400 lb
HC 285 base machine without CWRS* (no rope)	96,200 lb
CWRS*	4,200 lb

* CWRS: Counterweight removable system

NOTES

Effective Date: November 2015.
Product specifications and prices are subject to change without notice or obligation. The photographs and/or drawings in this document are for illustrative purposes only. Refer to the appropriate Operator's Manual for instructions on the proper use of this equipment. Failure to follow the appropriate Operator's Manual when using our equipment or to otherwise act irresponsibly may result in serious injury or death. The only warranty applicable to our equipment is the standard written warranty applicable to the particular product and sale and Terex makes no other warranty, express or implied. Products and services listed may be trademarks, service marks or trade-names of Terex Corporation and/or its subsidiaries in the USA and other countries. All rights are reserved.
Terex® is a registered trademark of Terex Corporation in the USA and many other countries.

Copyright Terex Cranes 2015

Terex Cranes, Global Marketing, Dinglerstraße 24, 66482 Zweibrücken, Germany
Tel. +49 (0) 6332 830, Email: info.cranes@terex.com, www.terexcranes.com

www.terex.com/cranes

Brochure Reference: TC-DS-I-E-HC285 -11/15

TEREX®

WORKS FOR YOU.™