STEEL CRANE MATS BY RAPTOR TECH

Absolutely The Best Crane Mats In The World.

This document is stored and available in the Raptor Tech Technical Document Repository.

To help our customers understand certain critical data points that factor into purchasing crane mats, Raptor Tech maintains a repository of technical documents with data from all major crane manufacturers.

You can visit Raptor Tech's repository to get crane specifications and technical details for crane models in addition to this model at:

https://library.steelcranemats.com

Thank You for Visiting the SteelCraneMats.com Technical Specifications Document Repository.

GROVE® by Manitowoc

RT770E
Product Guide

Ansi B30.5
Imperial 85%

Features

- 65 t (70 USt) capacity
- 11 m – 42 m (36 ft – 138 ft) five-section full power boom
- 10,1 m - 17,1 m (33 ft - 56 ft) offsettable bi-fold lattice swingaway extension
- 6,1 m (20 ft) extension insert
- 6516 kg (14,365 lb) counterweight pinned to superstructure

STEEL CRANE BRAKE & REPORTER

Professional Technical Documentation

The Superflash Technical Document Repository

Is the only official source of this document.

The Superflash Technical Document Repository

is the copyrighted work published by Superflash Technical Documentation Services LLC.

Unauthorized reproduction, distribution, or modification of this document is prohibited.

Contact info@superflash.com for inquiries.

If you have received this document from any other source, it may be outdated, incomplete, or modified without our knowledge. Please ask the sender for the current version.

GROVE RT770E

This 65 t (70USt) capacity rough-terrain crane combines the MEGAFORM™ boom shape with full-power capability. With four-wheel multi-mode steering, and the Full Vision cab optimize mobility and operator confidence on the job site.

Features

MEGAFORM™ boom

The superstructure features a full-power five-section MEGAFORM™ boom that can reach to a maximum tip height of 44,6 m (146 ft). The sequence synchronized extension features telescopic boom sections via a pedal or single lever control.

Smooth operation

The RT770E has a quick-reeve boom nose and swingaway alignment device to help operators set up smoothly.

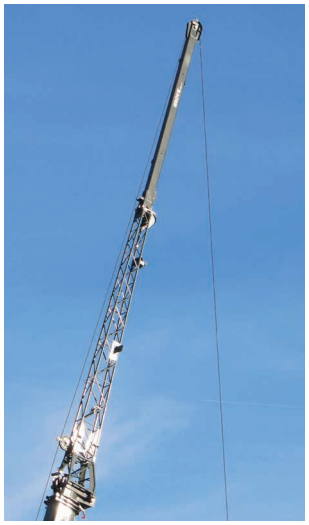

Extensions

An optional bi-fold swingaway lattice extension easily stows on the side of the base boom for easy transport while providing on-board extension from 10,1 m - 17,1 m (33 ft - 56 ft) for a maximum tip height of 61,6 m (202 ft). By adding the 6,1 m (20 ft) insert, the maximum tip height can be extended to 67,3 m (221 ft).

CraneSTAR

CraneSTAR is an exclusive and innovative crane asset management system

that helps improve your profitability and reduce costs by remotely monitoring critical crane data.
Visit www.cranestar.com for more information.

Job site benefits

Ease of transport

An optional bi-fold swingaway lattice extension easily stows on the side of the base boom for easy transport while providing on-board extension.

By adding the insert of 6,1 m (20 ft) the maximum tip height on the RT770E can be extended even further to 67,3 m (221 ft)

Ease of operation

The full-vision cab, with std. hot water heat and air conditioning, full glass door, tilt / telescoping steering wheel, full gauge and light indicator instrumentation provides the operator with a comfortable working environment and full indication of the crane set-up and working status.

Rugged durability and ease of inspection

Inverted outrigger jacks offers protection of the cylinder rod from sand, dust, oils and various elements on a job site and increases seal life. The outriggers can be spread in three different positions: fully retracted, 50% and 100% open.

The hoist access platform provides safe and easy access to inspect the hoist and wire rope without having to tie off.

Manitowoc Crane Care™

Manitowoc Crane Care when you need it.
The assurance of the world's most advanced crane service and support to get you back to work fast.

Manitowoc Finance™

Manitowoc Finance helps you get right to work generating profits for your business.
Financial tools that help you capitalize on opportunity with solutions that fit your needs.

Contents

Dimensions and weights	5
Working range	7
Load charts	9
Rigging chart	13
Load handling	14
Specifications	15
Symbols glossary	17

Dimensions and weights

Dimensions														
	A	B	C	D	E	F	G	A	B	C	D	E	F	G
Tire Size 29.5 x 25	14 961 (589)	15 494 (610)	12 460 (491)	11 732 (462)	11 342 (446)	9004 (355)	7662 (302)	10 922 (430)	11 153 (439)	7830 (308)	7099 (280)	6744 (266)	4368 (172)	3496 (138)
	Two-wheel steer							Four-wheel steer						

Dimensions are shown in mm (in).

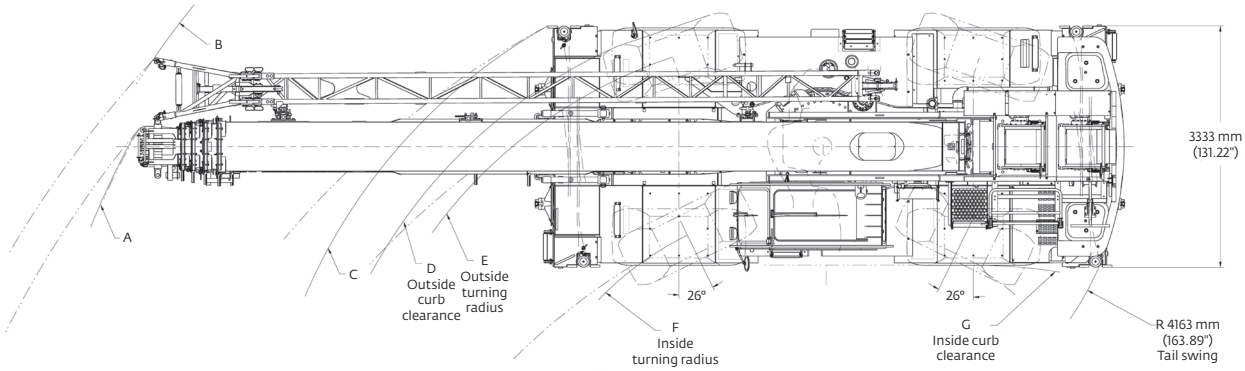

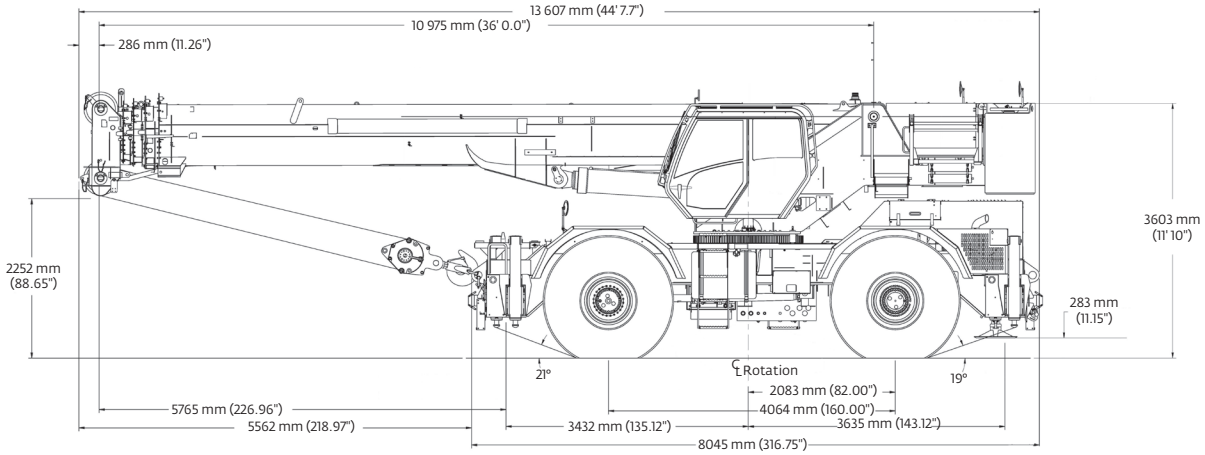

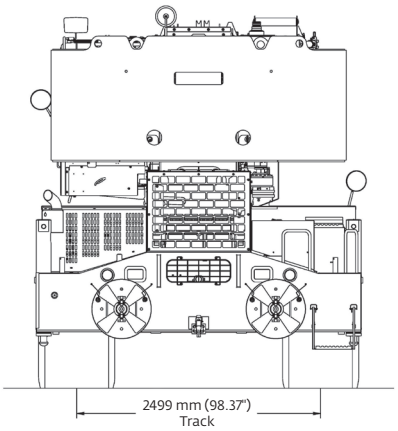

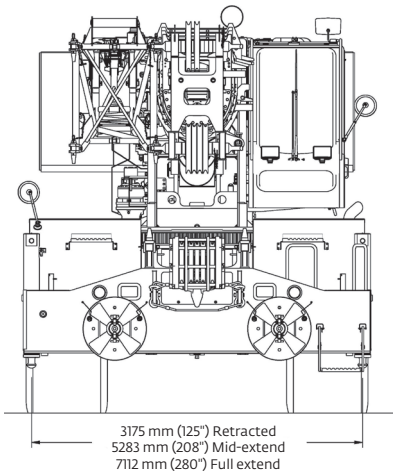

Weights

Weights						
	GVW		Front		Rear	
	kg	lb	kg	lb	kg	lb
Basic Machine: (T4F) including 42,0 m (138 ft) main boom, main hoist with 198 m (650 ft) of wire rope, auxiliary hoist with 198 m (650 ft) of wire rope, full pinned counterweight, full decking, A/C, and hoist access platform.	42 063	92,731	20 126	44,370	21 937	48,361
Add: 10,1 m - 17,1 m (33 ft -56 ft) bi-fold swingaway + extension carrier brackets + aux. boom nose	1295	2854	2175	4796	-880	-1942
crane weight	43 357	95,585	22 302	49,166	21 056	46,419
Add: 60 t (65 USt) 5 sheave hook block stowed in trough	581	1280	581	1280	0	0
crane weight	43 938	96,865	22 882	50,446	21 056	46,419
Add: 7,5 t (8.3 USt) headache ball tied to O/R cable	161	355	262	578	-101	-223
crane weight	44 099	97,220	23 144	51,024	20 955	46,196

42 m (138 ft) main boom and 10,1 m - 17,1 m (33 ft - 56 ft) bi-fold swingaway

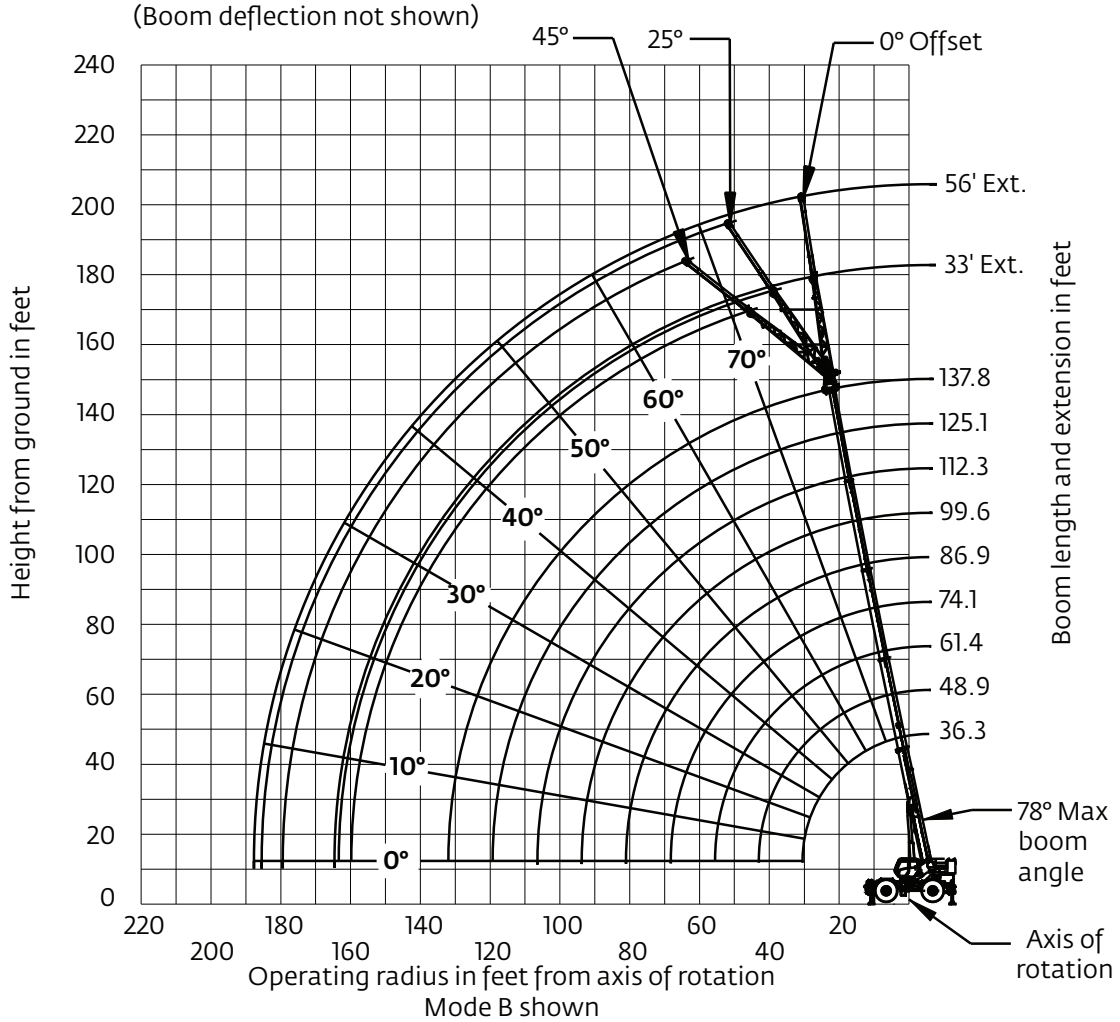

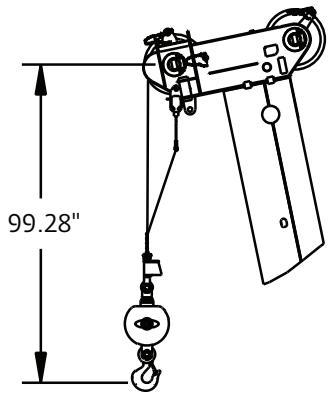

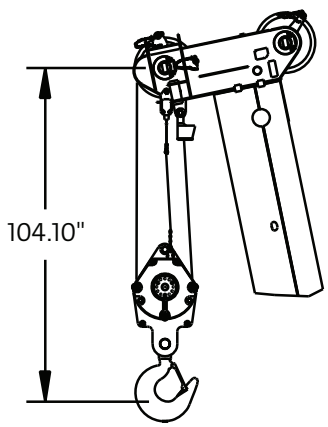

Dimensions are for largest Grove furnished hook block and headache ball, with anti-two block activated.

THIS CHART IS ONLY A GUIDE AND SHOULD NOT BE USED TO OPERATE THE CRANE.
The individual crane's load chart, operating instructions and other instructional plates must be read and understood prior to operating the crane.

Working range
(Mode B)

42 m (138 ft) main boom, 10,1 m - 17,1 m (33 ft - 56 ft) bi-fold swingaway and 6,1 m (20 ft) extension insert

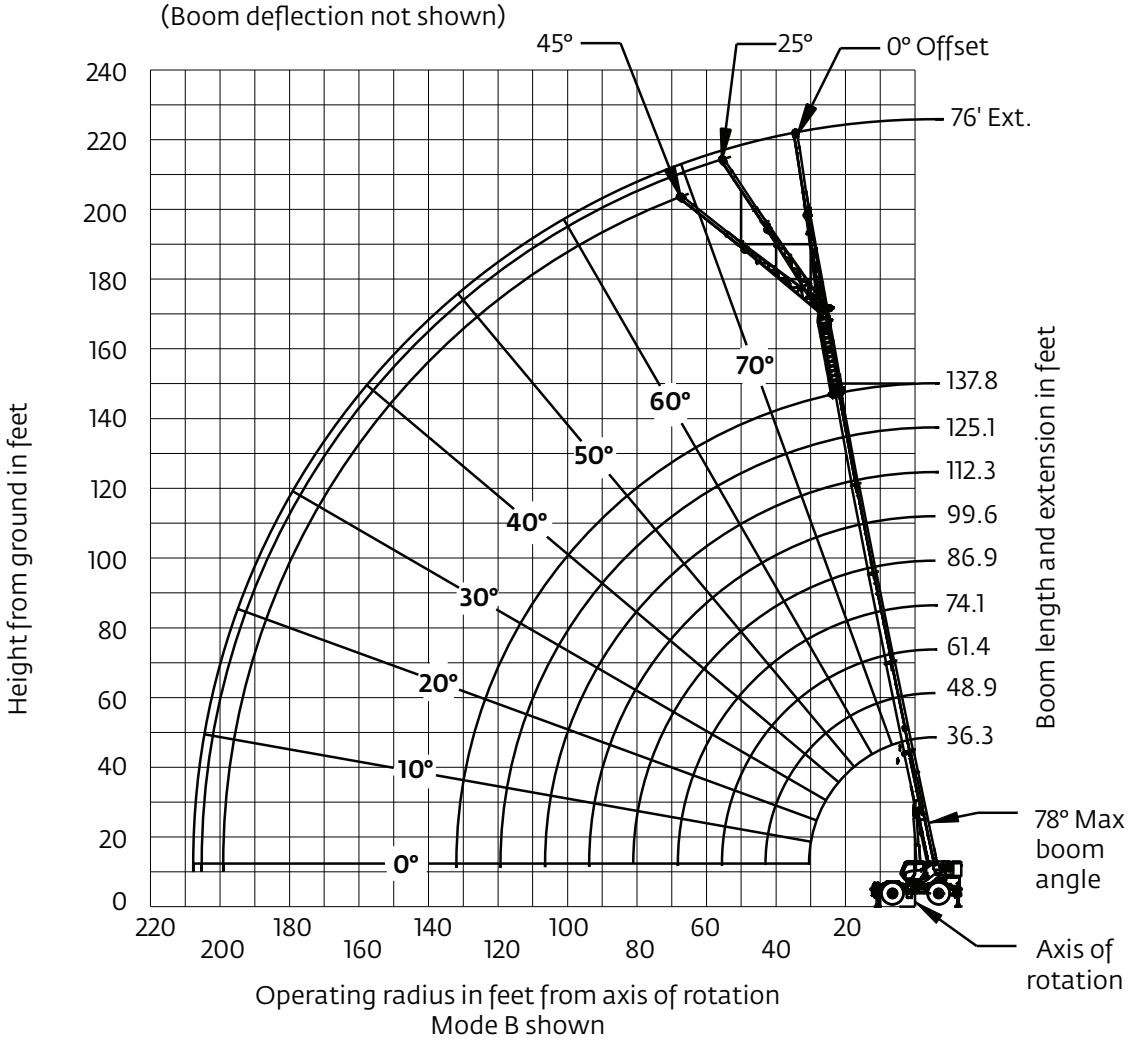

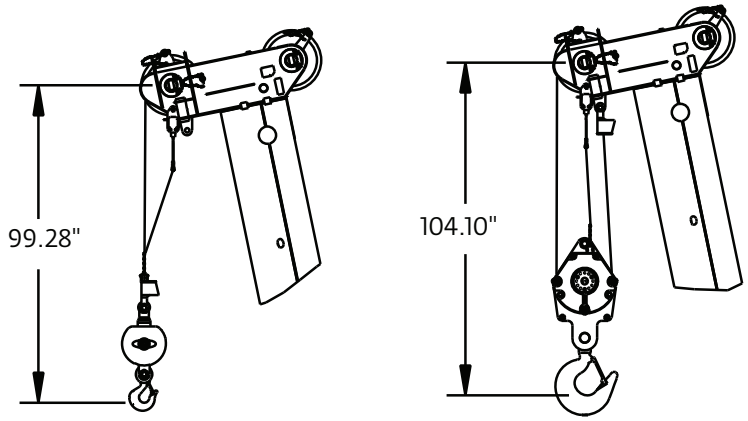

Dimensions are for largest Grove furnished hook block and headache ball, with anti-two block activated.

THIS CHART IS ONLY A GUIDE AND SHOULD NOT BE USED TO OPERATE THE CRANE.
The individual crane's load chart, operating instructions and other instructional plates must be read and understood prior to operating the crane.

11 m - 42 m (36 ft - 138 ft)	6516 kg (14,365 lb)	23 ft 4 in 100%	360°

Pounds

Feet	36.3	48.9	49.1	61.4	61.8	74.1	74.5	86.9	87.3	99.6	100.0	112.3	112.7	125.1	125.3	137.8
Tele 1 Tele 2 Tele 3 Tele 4	0% 0% 0% 0%	50% 0% 0% 0%	0% 17% 17% 17%	100% 0% 0% 0%	0% 33% 33% 33%	100% 17% 17% 17%	0% 50% 50% 50%	100% 33% 33% 33%	0% 67% 67% 67%	100% 50% 50% 50%	0% 83% 83% 83%	100% 67% 67% 67%	0% 100% 100% 100%	100% 83% 83% 83%	50% 100% 100% 100%	100% 100% 100% 100%
Mode	A, B	B	A	B	A	B	A	B	A	B	A	B	A	B	A	A, B
9	140,000 (71)															
10	130,000 (69.5)	91,650 (75.5)	50,000 (75)		*49,900 (78)											
12	112,500 (66)	91,650 (73)	50,000 (73)	72,350 (78)	49,900 (76.5)											
15	93,250 (60.5)	91,100 (69)	50,000 (69)	72,350 (74)	49,900 (73.5)	*50,000 (78)	41,650 (78)									
20	71,550 (50)	69,500 (62.5)	50,000 (62.5)	66,300 (69)	49,900 (68.5)	50,000 (73)	41,650 (73)	49,850 (78)	29,750 (75.5)	*39,250 (78)	*25,800 (78)					
25	56,650 (37.5)	54,900 (55.5)	50,000 (55.5)	54,350 (63.5)	49,750 (63.5)	50,000 (69)	41,650 (68.5)	44,250 (72.5)	29,750 (72.5)	39,250 (75.5)	25,800 (75)	*29,550 (78)	*21,900 (78)	*22,600 (78)		
30	43,700 (16)	42,650 (47.5)	45,550 (47.5)	41,900 (58)	44,950 (58)	43,300 (64.5)	36,550 (64.5)	38,100 (69)	28,050 (68.5)	34,400 (72.5)	24,850 (72)	29,550 (75)	21,900 (74.5)	22,600 (77)	*21,750 (78)	*18,600 (78)
35		33,700 (38)	36,600 (38)	32,250 (52)	37,800 (52)	33,700 (60)	32,450 (60)	33,150 (65.5)	24,950 (65)	30,050 (69)	22,150 (69)	27,600 (72.5)	19,950 (71.5)	22,600 (74.5)	20,900 (74)	18,600 (76)
40		26,050 (25)	28,700 (25.5)	24,950 (45.5)	29,750 (46)	26,250 (55.5)	29,150 (55.5)	27,200 (61.5)	22,450 (61.5)	26,450 (66)	19,900 (65.5)	24,400 (69.5)	17,950 (69)	22,350 (72)	19,000 (71.5)	18,300 (74)
45				19,650 (38)	24,050 (38.5)	20,750 (50.5)	24,900 (50.5)	21,850 (58)	20,350 (57.5)	22,800 (63)	18,050 (62.5)	21,700 (66.5)	16,300 (66)	20,300 (69.5)	17,350 (69)	18,050 (72)
50				15,500 (28.5)	19,800 (29)	16,700 (45)	20,700 (45)	17,900 (53.5)	18,500 (53.5)	18,750 (59.5)	16,350 (59)	19,400 (64)	14,800 (63.5)	18,200 (67)	15,950 (66.5)	16,700 (69.5)
55				12,200 (12)	16,450 (14)	13,600 (38.5)	17,400 (39)	14,850 (49.5)	16,800 (49.5)	15,600 (56)	14,800 (55.5)	16,300 (61)	13,350 (60.5)	16,350 (64.5)	14,650 (64)	15,500 (67.5)
60						11,100 (31)	14,800 (31.5)	12,450 (44.5)	15,350 (45)	13,100 (52)	13,450 (52)	13,750 (57.5)	12,150 (57.5)	14,200 (62)	13,400 (61.5)	14,000 (65)
65						9070 (21)	12,650 (22)	10,500 (39)	13,550 (39.5)	11,050 (48.5)	12,300 (48.5)	11,650 (54.5)	11,050 (54.5)	12,150 (59)	12,250 (59)	12,600 (62.5)
70								8870 (33)	11,750 (33.5)	9420 (44)	11,300 (44.5)	9950 (51)	10,100 (51)	10,400 (56.5)	11,250 (56)	10,850 (60.5)
75								7450 (25.5)	10,250 (26)	8010 (39.5)	10,350 (40)	8500 (47.5)	9270 (48)	8940 (53.5)	10,000 (53.5)	9390 (58)
80								6190 (13)	8950 (14.5)	6800 (34)	9130 (34.5)	7250 (44)	8530 (44)	7690 (50.5)	8760 (50.5)	8130 (55.5)
85										5720 (28)	8050 (28.5)	6180 (39.5)	7860 (40)	6610 (47)	7690 (47)	7050 (52.5)
90										4760 (19.5)	7100 (20.5)	5240 (35)	7250 (35.5)	5670 (44)	6750 (44)	6100 (50)
95												4400 (30)	6530 (30.5)	4840 (40)	5930 (40.5)	5270 (47)
100												3640 (23.5)	5820 (24)	4110 (36)	5200 (36)	4530 (43.5)
105												2970 (13)	5160 (14.5)	3440 (31.5)	4530 (31.5)	3870 (40.5)
110														2830 (26)	3920 (26.5)	3250 (36.5)
115														2280 (19)	3370 (19)	2690 (32.5)
120																2170 (28)
125																1700 (22)
130																1270 (13.5)
Minimum boom angle (°) for indicated length (no load)																0
Maximum boom length (ft) at 0° boom angle (no load) - Mode A																137.8
Maximum boom length (ft) at 0° boom angle (no load) - Mode B																137.8

NOTE: ( ) Boom angles are in degrees.
*This capacity is based on maximum boom angle

Boom angle	Lifting capacities at 0° boom angle															
	36.3	48.9	49.1	61.4	61.8	74.1	74.5	86.9	87.3	99.6	100.0	112.3	112.7	125.1	125.3	137.8
0°	30,400 (30.5)	18,500 (43.1)	20,600 (43.2)	11,850 (55.6)	15,450 (56)	7890 (68.3)	11,300 (68.7)	5950 (81)	8610 (81.4)	4110 (93.8)	6390 (94.2)	2780 (106.5)	4920 (106.9)	1850 (119.2)	2920 (119.4)	1110 (132)

NOTE: ( ) Reference radii in feet.

80051692

THIS CHART IS ONLY A GUIDE AND SHOULD NOT BE USED TO OPERATE THE CRANE.

The individual crane's load chart, operating instructions and other instructional plates must be read and understood prior to operating the crane.

Load charts

38.1 m (125.1 ft) | 10,1 m - 17,1 m (33 ft - 56 ft) | 6516 kg (14,365 lb) | 23 ft 4 in 100% | 360°

Pounds

MODE B

Radius in feet	33 ft LENGTH			56 ft LENGTH		
	0° OFFSET	25° OFFSET	45° OFFSET	0° OFFSET	25° OFFSET	45° OFFSET
30	*10,850 (78)					
35	10,850 (77.5)					
40	10,850 (76)			6130 (78)		
45	10,850 (74.5)	*10,500 (78)		6130 (77)		
50	10,850 (72.5)	9920 (77)	*7290 (78)	6130 (75.5)		
55	10,850 (71)	9380 (75)	7090 (77)	6130 (74)		
60	10,850 (69)	8890 (73)	6930 (75)	6130 (72.5)	*5200 (78)	
65	10,150 (67)	8440 (71)	6780 (73)	6130 (70.5)	5060 (77.5)	
70	9560 (65)	8030 (69)	6650 (71)	6130 (69)	4930 (75.5)	*3810 (78)
75	9000 (63)	7660 (67)	6500 (69)	6130 (67.5)	4800 (74)	3720 (77.5)
80	7990 (60.5)	7310 (64.5)	6390 (67)	6020 (66)	4680 (72)	3620 (75.5)
85	6930 (58.5)	7000 (62.5)	6290 (64.5)	5670 (64)	4560 (70)	3520 (74)
90	6000 (56)	6710 (60)	6200 (62)	5360 (62.5)	4460 (68.5)	3440 (71.5)
95	5180 (53.5)	6020 (57.5)	5980 (60)	5070 (60.5)	4290 (66.5)	3400 (69.5)
100	4460 (51)	5180 (55)	5180 (57.5)	4800 (59)	4110 (64.5)	3310 (67.5)
105	3810 (48.5)	4430 (52.5)	4480 (54.5)	4460 (57)	3940 (62.5)	3270 (65)
110	3230 (46)	3760 (50)	3840 (52)	3890 (55)	3780 (60.5)	3230 (63)
115	2700 (43.5)	3150 (47)	3260 (49)	3370 (52.5)	3640 (58.5)	3190 (60.5)
120	2230 (40.5)	2600 (44)		2900 (50.5)	3500 (56)	3160 (58)
125	1790 (37.5)	2100 (41)		2470 (48)	3170 (53.5)	3140 (55.5)
130	1390 (34)	1630 (37.5)		2070 (45.5)	2690 (51)	3020 (53)
135	1030 (30)	1210 (33.5)		1710 (43)	2240 (48.5)	2520 (50)
140				1380 (40.5)	1830 (45.5)	
145				1070 (37.5)	1450 (42.5)	
150					1100 (39.5)	
Min. boom angle for indicated length (no load)	29°	32°	48°	36°	38°	49°
Max. boom length at 0° boom angle (no load) Mode B	99.6 ft			86.9 ft		

NOTE: ( ) Boom angles are in degrees.
*This capacity is based on maximum obtainable boom angle.

80051695

38.2 m (125.3 ft) | 10,1 m - 17,1 m (33 ft - 56 ft) | 6516 kg (14,365 lb) | 23 ft 4 in 100% | 360°

Pounds

MODE A

Radius in feet	33 ft LENGTH			56 ft LENGTH		
	0° OFFSET	25° OFFSET	45° OFFSET	0° OFFSET	25° OFFSET	45° OFFSET
35	10,200 (78)					
40	10,200 (76)			*5750 (78)		
45	10,200 (74.5)	*8060 (78)		5750 (77)		
50	9490 (72.5)	8050 (76.5)	*6950 (78)	5750 (75.5)		
55	8770 (70.5)	7520 (74.5)	6950 (77.5)	5750 (73.5)		
60	8300 (68.5)	7060 (72.5)	6660 (75.5)	5750 (72)	*4820 (78)	
65	7740 (66.5)	6750 (70.5)	6320 (73.5)	5750 (70.5)	4820 (77)	
70	7250 (64.5)	6370 (68.5)	6020 (71)	5480 (68.5)	4640 (75.5)	
75	6820 (62.5)	6040 (66.5)	5740 (69)	5160 (67)	4340 (73.5)	3720 (78)
80	6440 (60.5)	5750 (64.5)	5500 (67)	4790 (65.5)	4140 (72)	3620 (76)
85	6020 (58.5)	5420 (62)	5220 (64.5)	4550 (63.5)	3890 (70)	3520 (74)
90	5710 (56)	5190 (60)	5020 (62)	4250 (62)	3720 (68)	3440 (72)
95	5370 (54)	4980 (57.5)	4800 (59.5)	3990 (60)	3520 (66)	3350 (70)
100	5130 (51.5)	4740 (55)	4640 (57)	3810 (58)	3330 (64)	3190 (68)
105	4650 (49.5)	4530 (52.5)	4460 (54)	3600 (56.5)	3210 (62)	3060 (65.5)
110	4040 (46.5)	4330 (50)	4280 (51.5)	3400 (54.5)	3050 (60)	2930 (63)
115	3490 (44)	3890 (47)	3830 (48.5)	3230 (52.5)	2910 (58)	2810 (60.5)
120	2990 (41)	3300 (44)		3070 (50.5)	2760 (56)	2690 (58.5)
125	2540 (37.5)	2750 (41)		2890 (48.5)	2640 (54)	2590 (55.5)
130	2120 (34)	2250 (37.5)		2620 (46)	2540 (51.5)	2490 (53)
135	1740 (30.5)	1790 (33.5)		2260 (43)	2430 (49)	2390 (50)
140	1380 (26)	1370 (29)		1920 (40.5)	2320 (46)	
145	1060 (21)			1610 (37.5)	2020 (43)	
150				1320 (34.5)	1660 (40)	
155				1050 (31)	1330 (36.5)	
160					1020 (32.5)	
Min. boom angle for indicated length (no load)	20°	28°	47°	30°	31°	49°
Max. boom length at 0° boom angle (no load) Mode A	112.7 ft			112.7 ft		

NOTE: ( ) Boom angles are in degrees.
*This capacity is based on maximum obtainable boom angle.

80051696

THIS CHART IS ONLY A GUIDE AND SHOULD NOT BE USED TO OPERATE THE CRANE.
The individual crane's load chart, operating instructions and other instructional plates must be read and understood prior to operating the crane.

42 m (138 ft) | 10,1 m - 17,1 m (33 ft - 56 ft) | 6516 kg (14,365 lb) | 23 ft 4 in 100% | 360°

Pounds

MODE A and B

Radius in feet	33 ft LENGTH			56 ft LENGTH		
	0° OFFSET	25° OFFSET	45° OFFSET	0° OFFSET	25° OFFSET	45° OFFSET
35	*8640 (78)					
40	8640 (77.5)					
45	8640 (76)			*5030 (78)		
50	8640 (74.5)	*7450 (78)		5030 (77)		
55	8640 (72.5)	7430 (76.5)	*6530 (78)	5030 (75.5)		
60	8180 (71)	7070 (74.5)	6530 (77.5)	5030 (74)		
65	7740 (69)	6730 (73)	6340 (75.5)	5030 (72.5)	*4500 (78)	
70	7230 (67.5)	6340 (71)	6010 (73.5)	5030 (70.5)	4500 (77)	
75	6880 (65.5)	6070 (69)	5790 (71.5)	5030 (69)	4340 (75)	*3760 (78)
80	6470 (63.5)	5750 (67)	5510 (69.5)	4860 (67.5)	4120 (73.5)	3690 (77.5)
85	6110 (61.5)	5460 (65)	5270 (67.5)	4600 (66)	3920 (72)	3600 (76)
90	5790 (59.5)	5200 (63)	5050 (65.5)	4280 (64.5)	3740 (70)	3500 (74)
95	5370 (57.5)	5030 (61)	4850 (63)	4070 (63)	3570 (68.5)	3370 (72)
100	4640 (55.5)	4810 (59)	4670 (61)	3870 (61.5)	3370 (66.5)	3240 (70.5)
105	3980 (53)	4510 (57)	4510 (58.5)	3640 (60)	3230 (65)	3090 (68.5)
110	3390 (51)	3840 (55)	3930 (56)	3480 (58)	3110 (63)	2980 (66.5)
115	2850 (48.5)	3240 (52.5)	3250 (53.5)	3290 (56.5)	2950 (61.5)	2850 (64.5)
120	2370 (46)	2700 (50)	2620 (51)	2860 (54.5)	2810 (59.5)	2730 (62.5)
125	1920 (43.5)	2200 (47)		2440 (52)	2710 (57.5)	2630 (60)
130	1520 (40.5)	1750 (44.5)		2040 (50)	2590 (55.5)	2530 (58)
135	1150 (38)	1330 (41.5)		1680 (47.5)	2340 (53.5)	2440 (55.5)
140				1350 (45.5)	1940 (51)	2190 (53)
145				1040 (43)	1570 (48.5)	1770 (50.5)
150					1220 (46)	
Min. boom angle for indicated length (no load)	37°	38°	50°	42°	44°	49°
Max. boom length at 0° boom angle (no load) Mode B	99.6 ft			86.9 ft		
Max. boom length at 0° boom angle (no load) Mode A	112.7 ft			112.7 ft		

NOTE: ( ) Boom angles are in degrees.
*This capacity is based on maximum obtainable boom angle.

80051697

42 m (138 ft) | 10,1 m - 17,1 m (33 ft - 56 ft) | 6,1 m (20 ft) | 6516 kg (14,365 lb) | 23 ft 4 in 100% | 360°

Pounds

MODE A and B

Radius in feet	76 ft LENGTH (56' ext + 20' insert)		
	0° OFFSET	25° OFFSET	45° OFFSET
50	*3550 (78)		
55	3550 (77)		
60	3550 (76)		
65	3550 (74.5)		
70	3550 (73)		
75	3550 (72)	*3390 (78)	
80	3550 (70.5)	3380 (77)	
85	3440 (69)	3160 (75.5)	*2660 (78)
90	3280 (68)	2960 (74)	2610 (77)
95	3060 (66.5)	2780 (72.5)	2580 (75.5)
100	2870 (65)	2610 (71)	2540 (73.5)
105	2690 (63.5)	2460 (69.5)	2410 (72)
110	2520 (62)	2320 (67.5)	2290 (70.5)
115	2370 (60.5)	2190 (66)	2170 (68.5)
120	2230 (59)	2070 (64.5)	2060 (67)
125	2100 (57.5)	1960 (62.5)	1960 (65)
130	1950 (56)	1850 (61)	1830 (63)
135	1800 (54)	1760 (59)	1740 (61)
140	1510 (52.5)	1640 (57.5)	1640 (59.5)
145	1240 (50.5)	1560 (55.5)	1540 (57)
150		1360 (53.5)	1470 (55)
155		1080 (51.5)	1310 (53)
160			1000 (50.5)
Min. boom angle for indicated length (no load)	49°	50°	49°
Max. boom length at 0° boom angle (no load) Mode B	74.1 ft		
Max. boom length at 0° boom angle (no load) Mode A	100.0 ft		

NOTE: ( ) Boom angles are in degrees.
*This capacity is based on maximum obtainable boom angle.

80051701

THIS CHART IS ONLY A GUIDE AND SHOULD NOT BE USED TO OPERATE THE CRANE.
The individual crane's load chart, operating instructions and other instructional plates must be read and understood prior to operating the crane.

Load charts

11 m - 42 m (36 ft - 138 ft)	6516 kg (14,365 lb)	Stationary	360°

Pounds

Feet	36.3	49.1	61.8	74.5
Tele 1 Tele 2 Tele 3 Tele 4	0% 0% 0% 0%	0% 17% 17% 17%	0% 33% 33% 33%	0% 50% 50% 50%
Mode	A, B	A	A	A
10	49,800 (69.5)	36,000 (75)		
12	45,650 (66)	32,550 (72.5)	32,500 (76.5)	
15	31,750 (60.5)	29,050 (68.5)	29,550 (73.5)	*27,850 (78)
20	18,750 (50)	19,950 (62)	21,050 (68.5)	21,600 (72.5)
25	12,000 (37.5)	13,350 (55)	14,500 (63.5)	14,900 (68.5)
30	7840 (16)	9350 (47.5)	10,400 (58)	10,850 (64.5)
35		6620 (38)	7590 (52)	8010 (60)
40		4650 (25.5)	5560 (46)	5950 (55.5)
45			4030 (38.5)	4390 (50.5)
50			2840 (29.5)	3160 (45)
55			1870 (14.5)	2180 (39)
60				1380 (31.5)
Minimum boom angle (°) for indicated length (no load)				30
Maximum boom length (ft) at 0° boom angle (no load)				61.8

NOTE: ( ) Boom angles are in degrees.
*This capacity is based on maximum boom angle

Boom angle	Lifting capacities at 0° boom angle			
	36.3	49.1	61.8	
0°	7490 (30.5)	3630 (43.2)	1520 (56)	

NOTE: ( ) Reference radii in feet. 80051702

11 m - 42 m (36 ft - 138 ft)	6516 kg (14,365 lb)	Pick and carry up to 2.5 mph 29.5 x 25 tires	Boom over front

Pounds

Feet	36.3	49.1	61.8	74.5
Tele 1 Tele 2 Tele 3 Tele 4	0% 0% 0% 0%	0% 17% 17% 17%	0% 33% 33% 33%	0% 50% 50% 50%
Mode	A, B	A	A	A
10	54,800 (69.5)	35,400 (75)		
12	49,800 (66)	35,400 (72.5)	23,550 (76.5)	
15	41,300 (60.5)	35,400 (68.5)	23,550 (73.5)	*19,000 (78)
20	31,200 (50)	32,500 (62)	23,550 (68.5)	19,000 (72.5)
25	24,100 (37.5)	25,700 (55)	23,550 (63.5)	19,000 (68.5)
30	17,550 (16)	19,550 (47.5)	20,750 (58)	19,000 (64.5)
35		14,550 (38)	15,900 (52)	16,300 (60)
40		10,300 (25.5)	12,450 (46)	12,950 (55.5)
45			9600 (38.5)	10,050 (50.5)
50			7920 (29.5)	8430 (45)
55			6380 (14.5)	6880 (39)
60				5610 (31.5)
65				4560 (22)
Minimum boom angle (°) for indicated length (no load)				0
Maximum boom length (ft) at 0° boom angle (no load)				74.5

NOTE: ( ) Boom angles are in degrees.
*This capacity is based on maximum boom angle

Boom angle	Lifting capacities at 0° boom angle			
	36.3	49.1	61.8	74.5
0°	16,950 (30.5)	8870 (43.2)	6110 (56)	3890 (68.7)

NOTE: ( ) Reference radii in feet. 80051703

NOTES TO ALL RUBBER CAPACITY CHARTS:

1. Capacities are in pounds and do not exceed 75% of tipping loads as determined by test in accordance with SAE J765.

2. Capacities are applicable to machines equipped with 29.5 x 25 (28 or 34) bias ply tires at, 65 psi cold inflation pressure.

3. Capacities appearing above the bold line are based on structural strength and tipping should not be relied upon as a capacity limitation.

4. Capacities are applicable only with machine on firm level surface.

5. On rubber lifting with boom extensions not permitted.

6. For pick and carry operation, boom must be centered over front of machine, mechanical swing lock engaged and load restrained from swinging.

7. Axle lockouts must be functioning when lifting on rubber.

8. All lifting depends on proper tire inflation, capacity and condition. Capacities must be reduced for lower tire inflation pressures. See lifting capacity chart for tire used. Damaged tires are hazardous to safe operation of crane.

9. Creep - not over 200 ft of movement in any 30 minute period and not exceeding 1 mph.

THIS CHART IS ONLY A GUIDE AND SHOULD NOT BE USED TO OPERATE THE CRANE.

The individual crane's load chart, operating instructions and other instructional plates must be read and understood prior to operating the crane.

RIGGING CHART

INSTALLATION AND REMOVAL OF HYDRAULIC REMOVABLE CWT

ON O/R'S FULLY EXTENDED - 360°

Pounds

Feet	*36.3	49.1
Tele 1 Tele 2 Tele 3 Tele 4	0% 0% 0% 0%	0% 17% 17% 17%
Mode	A, B	A
10	20,500 (69.5)	20,500 (75)
12	20,500 (66)	20,500 (73)
15	20,500 (60.5)	20,500 (69)
20	20,500 (50)	20,500 (62.5)
25	20,500 (37.5)	20,500 (55.5)
30	20,500 (16)	20,500 (47.5)
35		20,500 (38)

NOTE: ( ) Boom angles are in degrees.

Boom angle	Main boom length in feet	
	*36.3	
0°	20,500 (30.5)	

80051952

NOTE: ( ) Reference radii in feet.
*Boom must be fully retracted.

THIS CHART IS ONLY A GUIDE AND SHOULD NOT BE USED TO OPERATE THE CRANE.
The individual crane's load chart, operating instructions and other instructional plates must be read and understood prior to operating the crane.

Load handling

Weight reductions for load handling devices		
33 ft - 56 ft: Folding boom extension:		
	Without block or ball	**With 355 lb overhaul ball**
*33 ft extension (erected)	4230 lb	5940 lb
*56 ft extension (erected)	9280 lb	12,100 lb
Folding extension with 20 ft insert:		
*56 ft extension (erected)	10,170 lb	12,260 lb
*Reduction of main boom capacities (no deduct required for stowed boom extension).		
Auxiliary boom nose:		
	130 lb	
Hook blocks and headache balls:		
65 USt, 5-sheave	1280 lb +	
8.3 USt, overhaul ball	355 lb +	

+Refer to rating plate for actual weight

When lifting over swingaway and/or jib combinations, deduct total weight of all load handling devices reeved over main boom nose directly from swingaway or jib capacity.

NOTE: All load handling devices and boom attachments are considered part of the load and suitable allowances MUST BE MADE for their combined weights. Weights are for Grove furnished equipment.

Line pulls and reeving information			
Hoists	**Cable specs**	**Permissible line pulls**	**Nominal cable length**
Main	3/4" (19 mm) 6x37 Class EIPS, IWRC Special Flexible Min. breaking strength 58,800 lb	16,800 lb*	500 ft
Main	3/4" (19 mm) 35x7 Class Rotation Resistant (non-rotating) Min. breaking strength 85,800 lb	16,800 lb*	653 ft
Main	22 mm Synthetic K™-100 Hoist Rope (ISO) Min. breaking strength 84,000 lb	16,800 lb*	673 ft
Main & Auxiliary	3/4" (19 mm) 35x7 Class Rotation Resistant (non-rotating) Min. breaking strength 85,800 lb	16,800 lb*	502 ft
Main & Auxiliary	22 mm Synthetic K™-100 Hoist Rope (ISO) Min. breaking strength 84,000 lb	16,800 lb*	522 ft

The approximate weight of 3/4" wire rope is 1.5 lb/ft.

The approximate weight of 22 mm synthetic rope is 0.21 lb/ft.

*With certain boom and hoist tackle combinations, the allowable line pull may be limited by hoist performance. Refer to Hoist Performance table for lift planning to ensure adequate hoist performance on drum rope layer required.

Hoist performance				
Wire rope layer	**Hoist line pulls two-speed hoist**		**Drum rope capacity (ft)**	
	Low available lb*	**High available lb***	**Layer**	**Total**
1	18,134	9067	101	101
2	16,668	8334	110	211
3	15,420	7710	120	331
4	14,347	7174	129	460
5	13,413	6707	139	599
6	12,594	6297	149	748
*Max lifting capacity: 6x37 and 35x7 class = 16,800 lb				

Tire inflation - PSI (BAR)		
Size (Front and Rear)	**TRA Code**	**Lifting service, general travel and extended travel**
29.5 x 25 (28 or 34) General/Titan, Denman Broadway/Rock Plus	E-3	65 (4.5) See operator's manual for extended roading.

Working area diagram

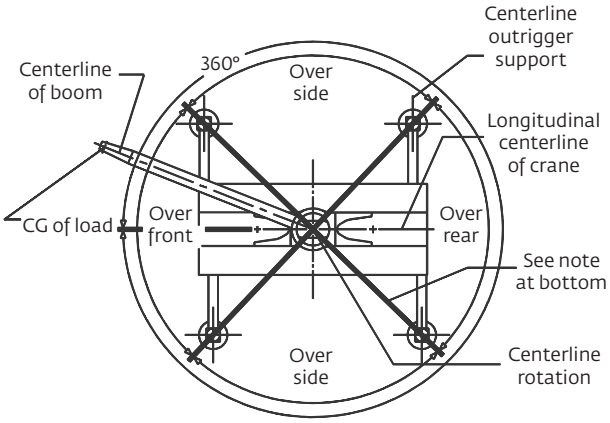

Diagram for lifting on outriggers

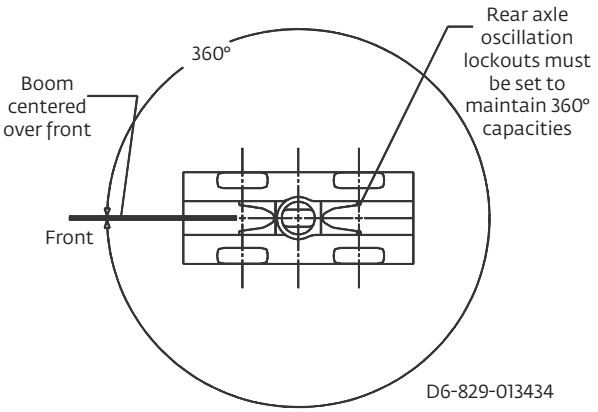

Diagram for lifting on tires

Bold lines determine the limiting position of any load for operation within working areas indicated.

THIS CHART IS ONLY A GUIDE AND SHOULD NOT BE USED TO OPERATE THE CRANE.
The individual crane's load chart, operating instructions and other instructional plates must be read and understood prior to operating the crane.

Super Structure

Boom

11 m - 42 m (36 ft – 138 ft) five-section, sequence synchronized, full-power boom with A&B mode.

Maximum tip height: 44,5 m (146 ft)

*Optional bi-fold swingaway extension

10,1 m - 17,1 m (33 ft - 56 ft) bi-fold lattice swingaway extension. Offsettable at 0°, 25° and 45°. Stows alongside base boom section.

Maximum tip height: 61,6 m (202 ft)

*Optional 6,1 m (20 ft) insert

Installs between boom nose and bi-fold extension, non-stowable.

Maximum tip height: 67,3 m (221 ft)

Boom nose

Four nylatron sheaves mounted on heavy-duty tapered roller bearings with removable pin-type rope guards. Quick-reeve type boom nose.

*Optional removable auxiliary boom nose with removable pin type rope guard.

Boom elevation

One double-acting hydraulic cylinder with integral holding valve provides elevation from -3° to 78°.

Load moment and anti-two block system

Standard "Graphic Display" load moment and anti-two block system with audio-visual warning and control lever lockout. These systems provide electronic display of boom angle, length, radius, tip height, relative load moment, maximum permissible load, load indication and warning of impending two-block condition. The standard Work Area Definition System allows the operator to pre-select and define safe working areas. If the crane approaches the pre-set limits, audio-visual warnings aid the operator in avoiding job-site obstructions.

Cab

Full-vision, all-steel fabricated with acoustical lining and tinted safety glass throughout. Deluxe seat incorporates armrest-mounted hydraulic single-axis controllers. Dash panel incorporates gauges for all engine functions. Other standard features include: hot water heater, air-conditioning, cab circulating air fan, sliding side and rear windows, sliding skylight with electric wiper and sunscreen, electric windshield wash/wipe, fire extinguisher and seat belt.

Swing

Planetary swing with foot-applied multi-disc brake. Spring applied, hydraulically-released swing brake and plunger-type, one position, mechanical house lock operated from cab. *Optional 360° mechanical swing lock. Maximum speed: 2.5 rpm.

Counterweight

6516 kg (14,365 lb) pinned to superstructure.

Hydraulic system

Three main gear pumps with a combined capacity of 465 LPM (123 GPM).

Maximum operating pressure: 27,6 MPa (4000 psi). Two individual post pressure compensated valve banks.

Return line type filter with full flow by-pass protection and service indicator. Replaceable cartridge with micron filtration rating of 5/12/16. 640 L (169 gal) reservoir. Integral oil cooler. System pressure test ports.

Hoist specifications (HP30A) main and auxiliary hoist

Main and auxiliary hoist: Model HP30A

Planetary reduction with automatic spring applied multi-disc brake. Grooved drum. Electronic hoist drum rotation indicator and hoist drum cable followers.

Maximum hoist single line pull: 8226 kg (18,134 lb)

Maximum single line speed: 153 m/min (502 fpm)

Maximum permissible line pull:
7620 kg (16,800 lb) with 35 x 7 class rope

Rope diameter: 19 mm (3/4 in)

Main Hoist Rope length: 198 m (650 ft)

Auxiliary Hoist Rope Length: 152,4 m (500 ft)

Rope type: 35 x 7 class rotation resistant

Maximum usable rope stowage: 210 m (692 ft).

Carrier

Chassis

Box section frame fabricated from high-strength, low alloy steel. Integral outrigger housings and front/rear towing, lifting, and tie down lugs.

Outrigger system

Four hydraulic telescoping single-stage double box beam outriggers with inverted jacks and integral holding valves. Three position settings, 100%, 50% and fully retracted. All steel fabricated, quick-release type round outrigger floats, 610 mm (24 in) diameter. Outrigger Monitoring System comes standard (required for North America, Canada, and E.U. Countries).

Maximum outrigger pad load: 42 550 kg (93,800 lb)

Outrigger controls

Controls and crane level indicator located in cab.

Fuel tank capacity

280 L (74 gal) - draw volume

*Denotes optional equipment

Specifications

Transmission

Rangeshift with 6 forward and 6 reverse speeds

(3 speeds high and 3 speeds low). Front axle disconnect for 4 x 2 travel.

Electrical system

Three 12-volt maintenance free batteries. 12-volt starting and lighting, circuit breakers, battery disconnect switch.

Drive

4 x 4

Steering

Fully independent power steering:

Front: Full hydraulic, steering wheel controlled.

Rear: Full hydraulic, switch controlled.

Provides infinite variations of 4 main steering modes: front only, rear only, crab and coordinated.

Rear steer centered indicating light.

4 wheel turning radius - 7,1 m (23 ft 4 in).

Engine (Tier 4F) Cummins

Cummins QSB6.7L diesel six cylinder, turbo-charged with Cummins Compact Catalyst (CCC) & Selective Catalytic Reduction (SCR) combo muffler, using Diesel Exhaust Fluid (DEF) injection. Meets emission per U.S. tier 4F and E.U. stage IV. 194kW (260 h.p.) at 2500 rpm. Maximum torque: 987 N-m (729 ft lb).

Fuel requirement: Maximum of 15 ppm sulphur content (Ultra Low Diesel Fuel) and Diesel Exhaust Fluid (DEF).

Note: Tier 4F engine Required in North American and European Union countries.

Engine (Tier 3)

Cummins QSB 6.7 L diesel, six cylinders, turbocharged, 179 kW (240 bhp) (Gross) at 2500 rpm. Maximum torque: 987 N-m (728 ft lb) at 1500 rpm.

Note: Required for sale outside of North American and European Union countries

Axles

Front: Drive/steer with differential and planetary reduction hubs rigid-mounted to frame.

Rear: Drive/steer with differential and planetary reduction hubs pivot-mounted to frame.

Automatic full hydraulic lockouts on rear axle permit

203 mm (8 in) oscillation only with boom centered over the front.

Brakes

Full hydraulic split circuit brakes operating on all wheels. Spring-applied, hydraulically released axle-mounted parking brake.

Tires

29.5 x 25 - 28PR bias earthmover type.

Lights

Full lighting package including turn indicators, head, tail, brake and hazard warning lights.

Maximum speed

37 km/h (23 mph) (no load).

Gradeability (theoretical)

75% (based on 44 099 kg [97,220 lb] GVW). 29.5 x 25 tires, pumps engaged, 42 m (138 ft) boom, bi-fold extension, aux. hoist and cable, and 65 USt hookblock.

Miscellaneous standard equipment

Full width steel fenders, full length steel decking, dual rear view mirrors, hook block tiedown, electronic back-up alarm, light package, front stowage well, tachometer, rear wheel position indicator, hot water heater, air conditioning package with hydraulic driven air conditioning, hoist mirrors, engine distress A/V warning system. Auxiliary hoist control valve arrangement (less hoist). Cold start aid and immersion type engine block heater, 120V 750 watt. Hoist access platform. Crane Star asset management system

*Optional equipment

- Auxiliary Hoist Package (includes Model HP30A auxiliary hoist with electronic hoist drum rotation indicator, hoist drum cable follower, 152,4 m (500 ft) of 19 mm (3/4 in) 35 X 7 class wire rope, auxiliary single sheave boom nose.
- Auxiliary Light and Convenience Package: includes superstructure mounted amber flashing light, in-cab LMI light bar, and dual base boom mounted halogen floodlights, rubber mat for stowage trough
- "CE" Mark Conformance (sound abatement foam kits, 3rd wrap indicator, emergency auxiliary steering, dual axis joystick controllers)
- Cross axle differential locks (front and rear)
- Manual pump disconnect
- Pintle hook - rear
- 360° positive swinglock
- PAT event recorder
- Hydraulic removable counterweight
- Vertical L.M.I. light tower (externally mounted)
- Synthetic rope for main and / or auxiliary hoist
- -29C/-20F Cold weather package
- -40C/-40F Arctic weather package
- Wireless wind speed indicator
- Spare tire/wheel

Denotes optional equipment

Symbols glossary

Axles

Crane control system

Heavy duty jib

Outriggers

Boom

Drive

Height (no max)

Radius

Boom elevation

Electrical system

Hoist

Rotation

Boom extension

Engine

Hook block

Speed

Boom length

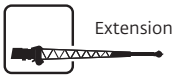
Extension

Hydraulic system

Steering

Boom nose

Frame

Insert

Suspension

Brakes

Fuel tank capacity

Lights

Swing

Cab

Gear

Oil

Tires

Counterweight

Grade

Outrigger controls

Transmission

Notes

Notes

Manitowoc Cranes

Regional headquarters

Americas
Manitowoc, Wisconsin, USA
Tel: +1 920 684 6621
Fax: +1 920 683 6277

Shady Grove, Pennsylvania, USA
Tel: +1 717 597 8121
Fax: +1 717 597 4062

Europe, Middle East, Africa
Dardilly, France - TOWERS
Tel: +33 (0)4 72 18 20 20
Fax: +33 (0)4 72 18 20 00

Wilhelmshaven, Germany - MOBILE
Tel: +49 (0) 4421 294 454
Fax: +49 (0) 4421 2944301

China
Shanghai, China
Tel: +86 21 6457 0066
Fax: +86 21 6457 4955

Greater Asia-Pacific
Singapore
Tel: +65 6264 1188
Fax: +65 6862 4040

Manitowoc Crane Care™

Manitowoc Crane Care when you need it.

The assurance of the world's most advanced crane service and support to get you back to work fast.

Manitowoc Finance™

Manitowoc Finance helps you get right to work generating profits for your business.

Financial tools that help you capitalize on opportunity with solutions that fit your needs.

This document is non-contractual. Constant improvement and engineering progress make it necessary that we reserve the right to make specification, equipment, and price changes without notice. Illustrations shown may include optional equipment and accessories and may not include all standard equipment.

©2015 Manitowoc

Form No. RT770E PG
Part No. 12-010-2M-0913

www.manitowoccranes.com